CONSTRUCTOPEDIA

NXT Kit 9797

Beta Version 2.0 August 17, 2007

Center for Engineering Educational Outreach
Tufts University

Copyright 2007 LEGOengineering.com & Tufts Center for Engineering Educational Outreach

Table of Contents

Simple Shapes and Structures ……. Page 3

Ways To Attach NXT Motors ……..... Page 6

Front End Setups …….. Page 36

15 Minute Building Projects ……. Page 51

Full Car Models ……...……. Page 62

Copyright 2007 LEGOengineering.com & Tufts Center for Engineering Educational Outreach

Simple Shapes and Structures

Square

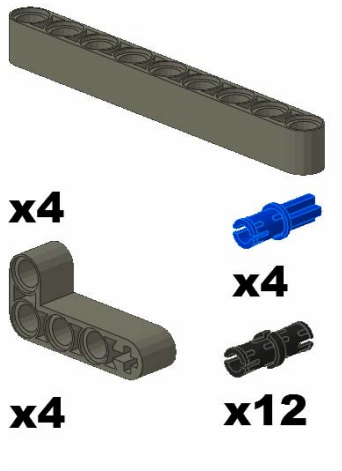

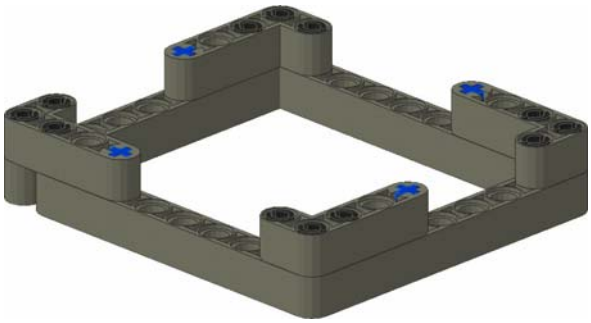

Reversing Trick

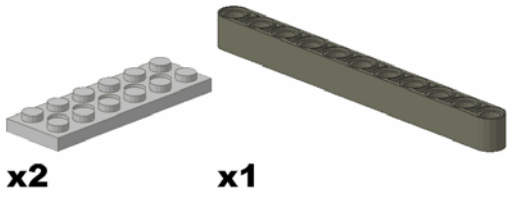

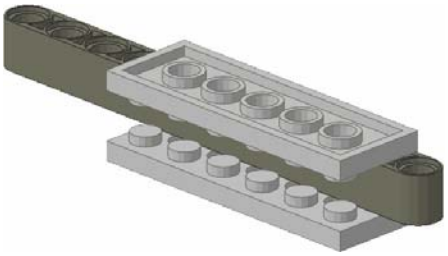

Cube

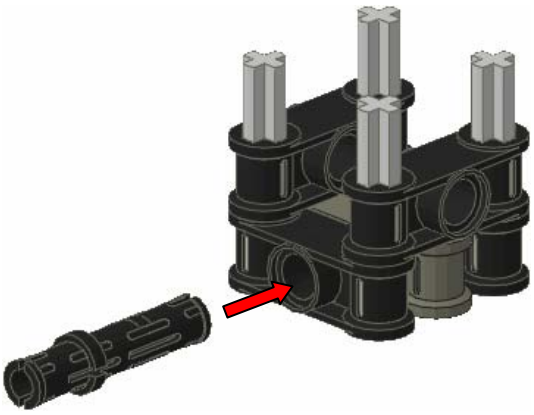

Copyright 2007 LEGOengineering.com & Tufts Center for Engineering Educational Outreach

Arch

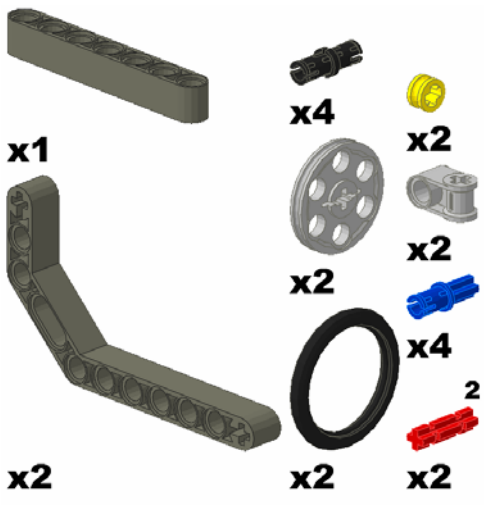

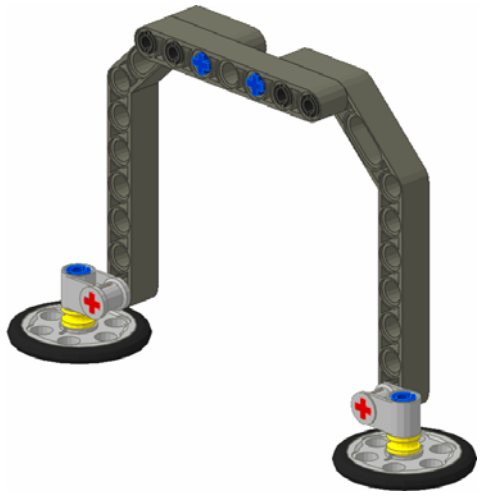

Beams

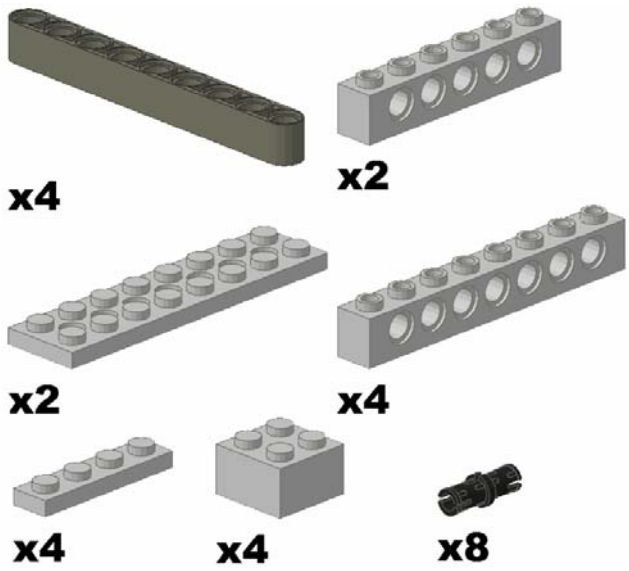

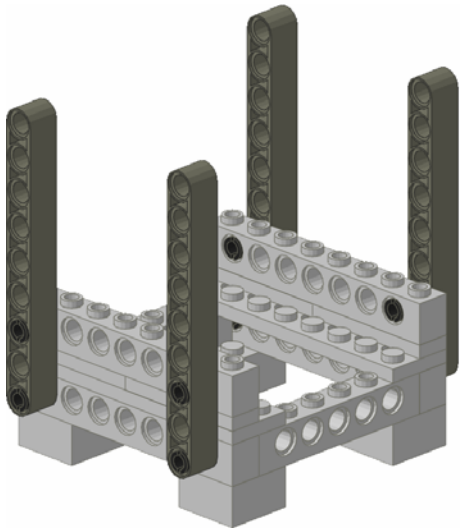

Copyright 2007 LEGOengineering.com & Tufts Center for Engineering Educational Outreach

Triangle

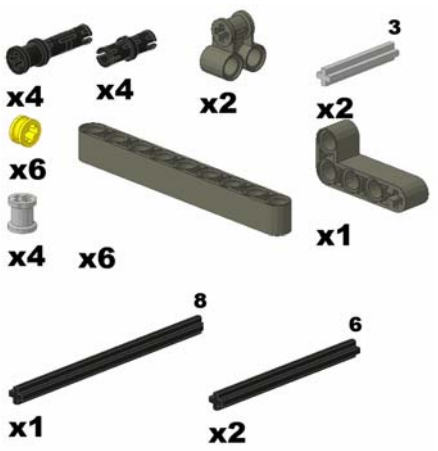

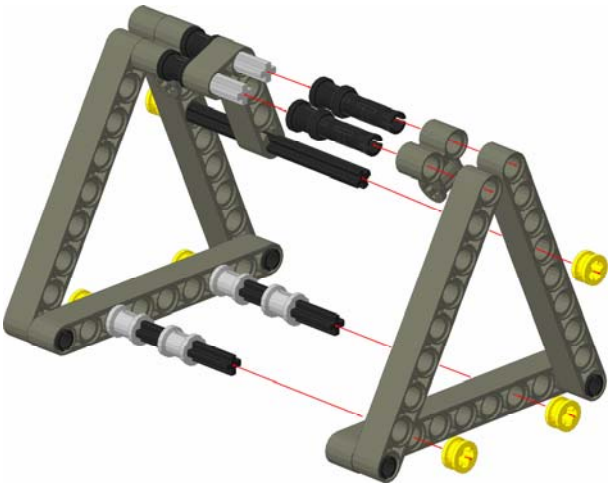

Alternate Triangle

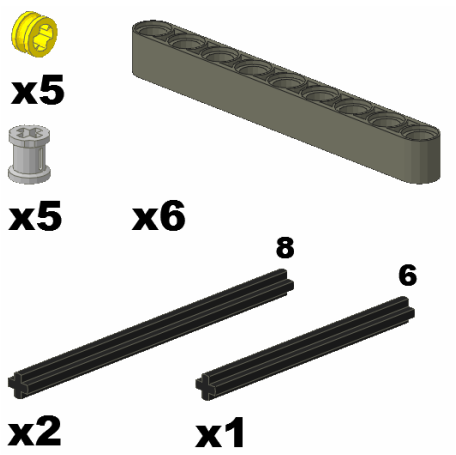

Copyright 2007 LEGOengineering.com & Tufts Center for Engineering Educational Outreach

Simple Side Attachment

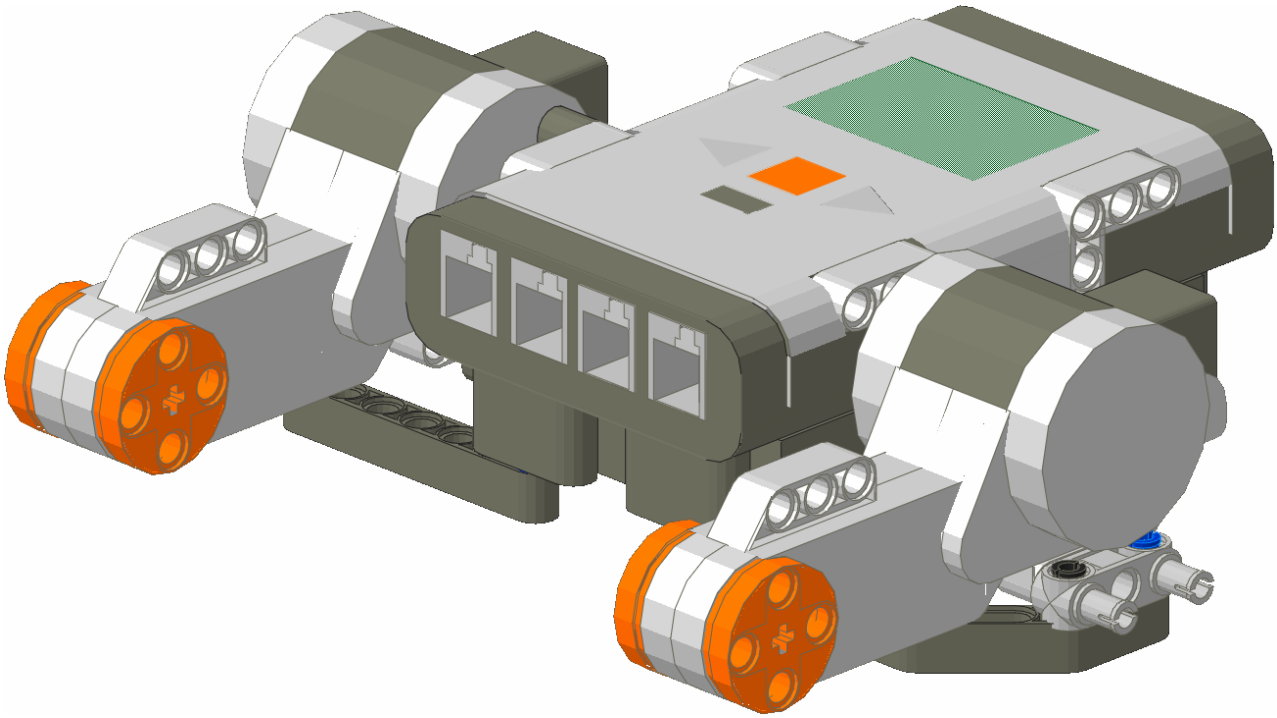

Model Description:

This is a motor attachment option in which the motors attach closely to the sides of the NXT.

Copyright 2007 LEGOengineering.com & Tufts Center for Engineering Educational Outreach

These are the parts that you will need:

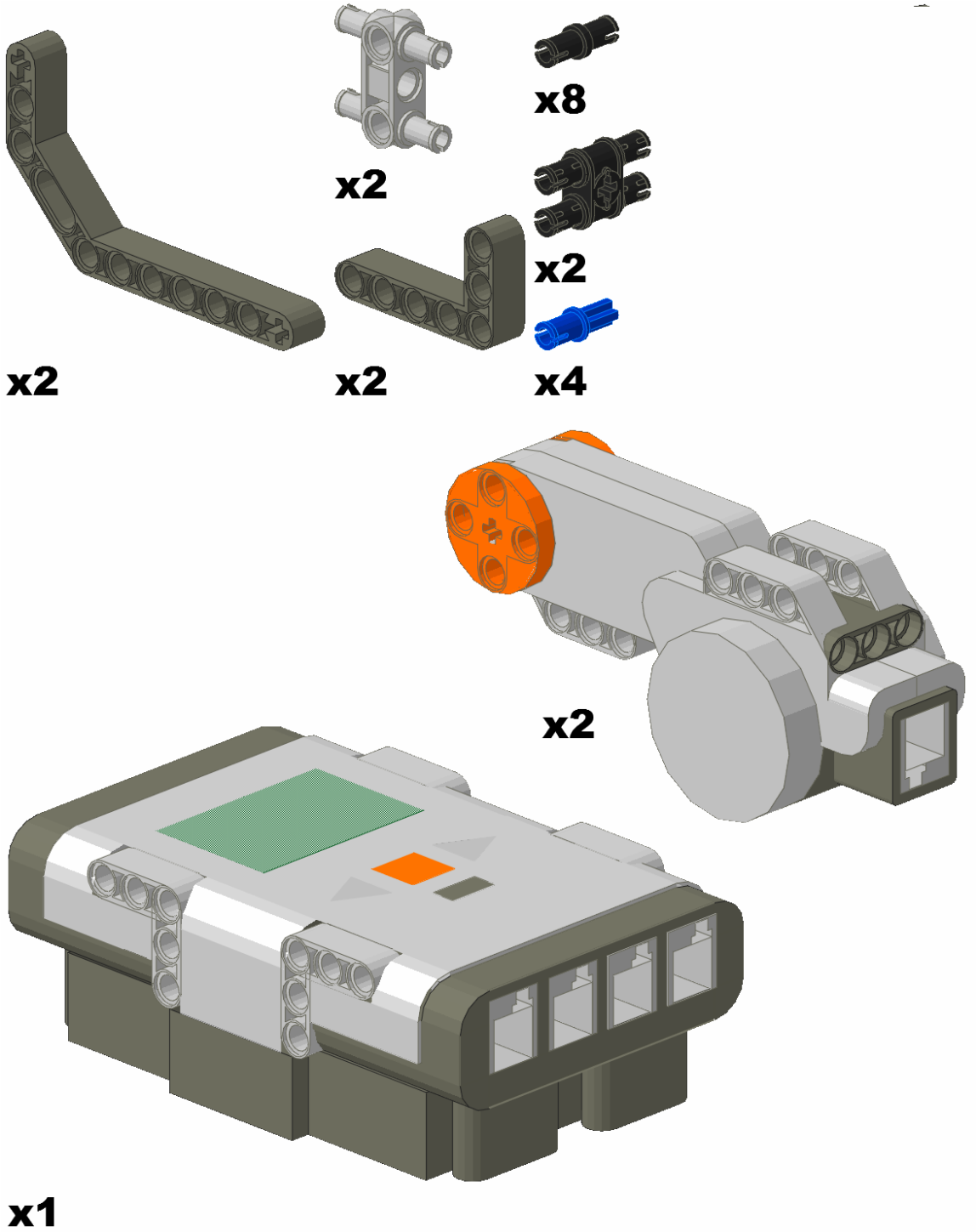

Copyright 2007 LEGOengineering.com & Tufts Center for Engineering Educational Outreach

Step# 1

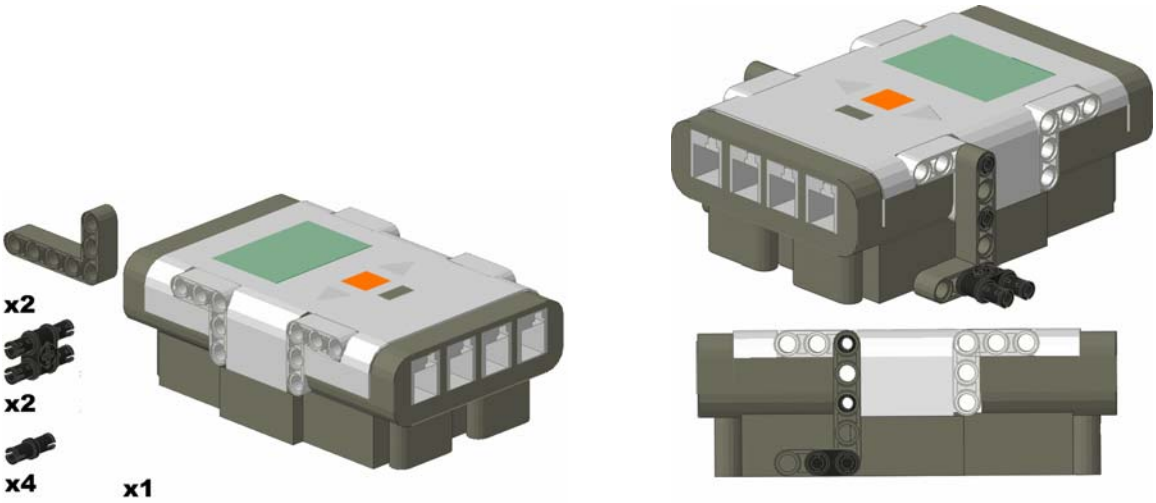

Attach the two bent beams to the NXT using friction pins. The shorter portion of the beam should be sticking out from the NXT. Insert a double pin connector into this portion.

Step# 2

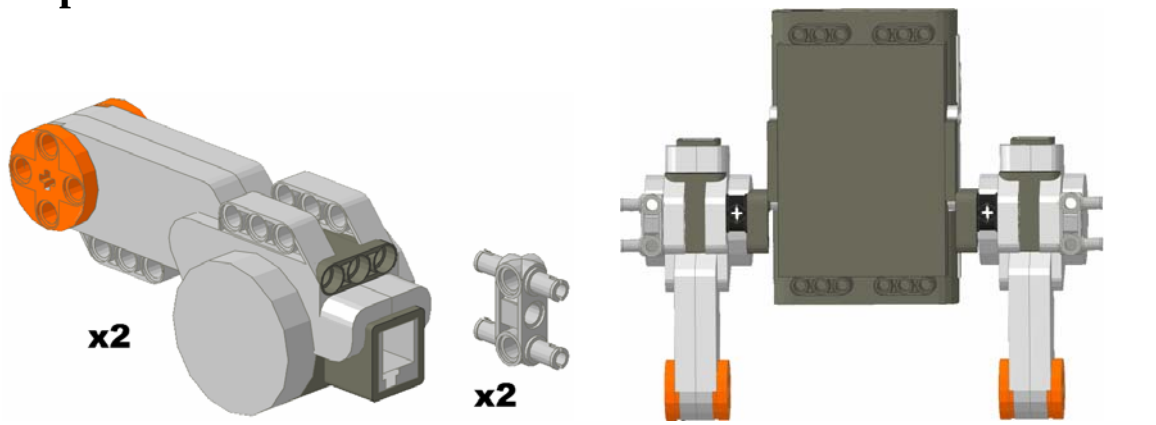

Fasten the motors to the double pin connectors on the bent beams. Then fit a four pin axel joiner into the outside mounting beam on the NXT.

Copyright 2007 LEGOengineering.com & Tufts Center for Engineering Educational Outreach

Step# 3

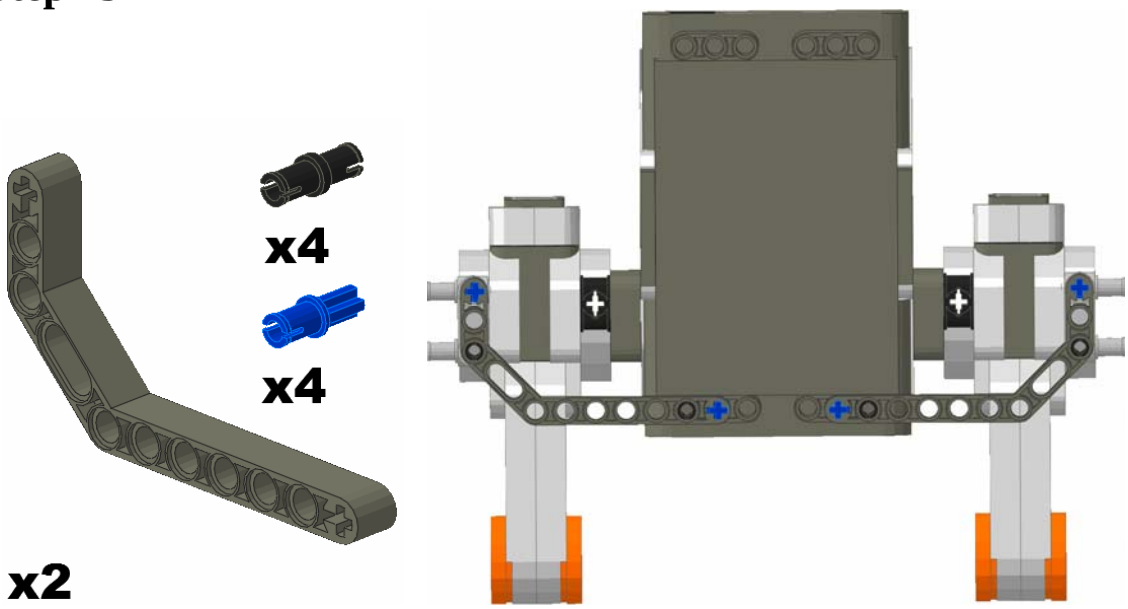

Attach the double bent beam to the four pin axel joiner and the NXT using the axel pins and friction pins.

Copyright 2007 LEGOengineering.com & Tufts Center for Engineering Educational Outreach

Underside Motor Attachment

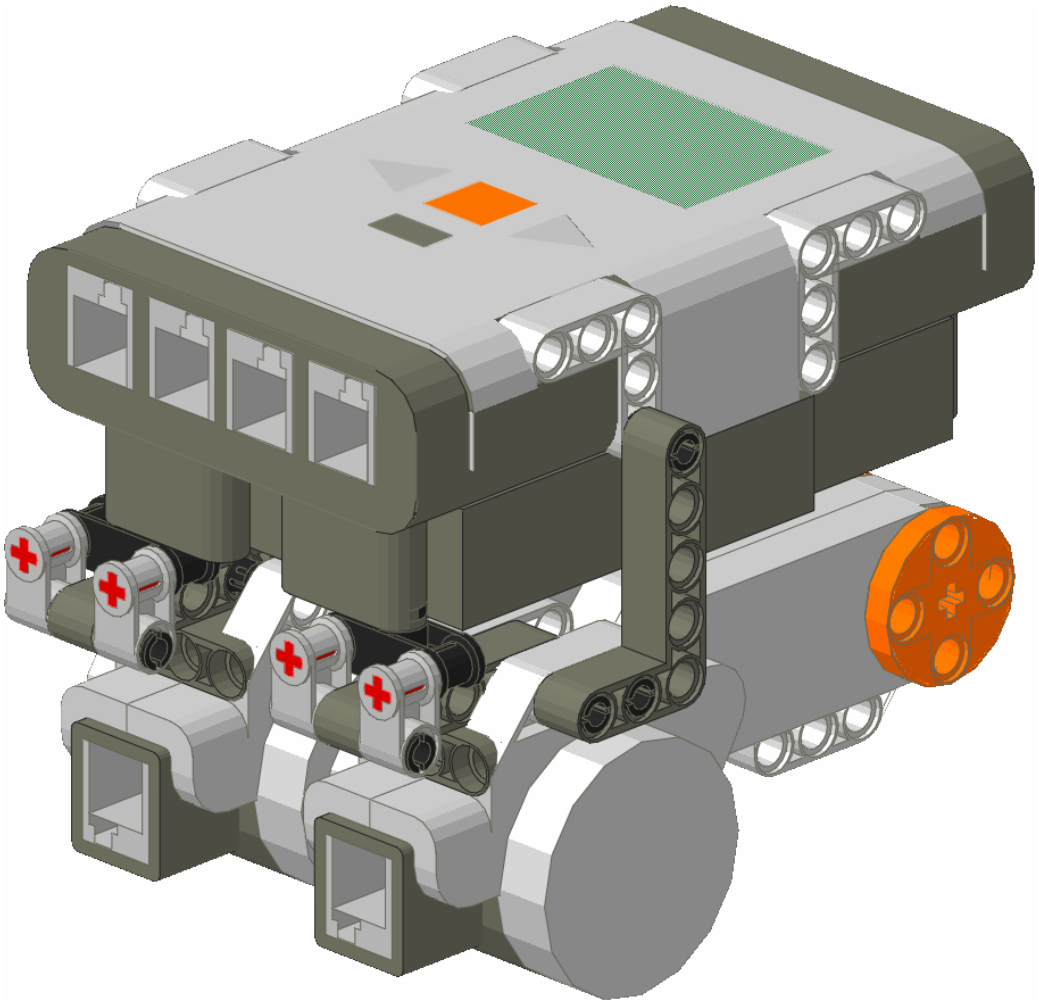

Model Description:

This is a simple, stable way to attach two motors under the NXT.

Copyright 2007 LEGOengineering.com & Tufts Center for Engineering Educational Outreach

These are the parts that you will need:

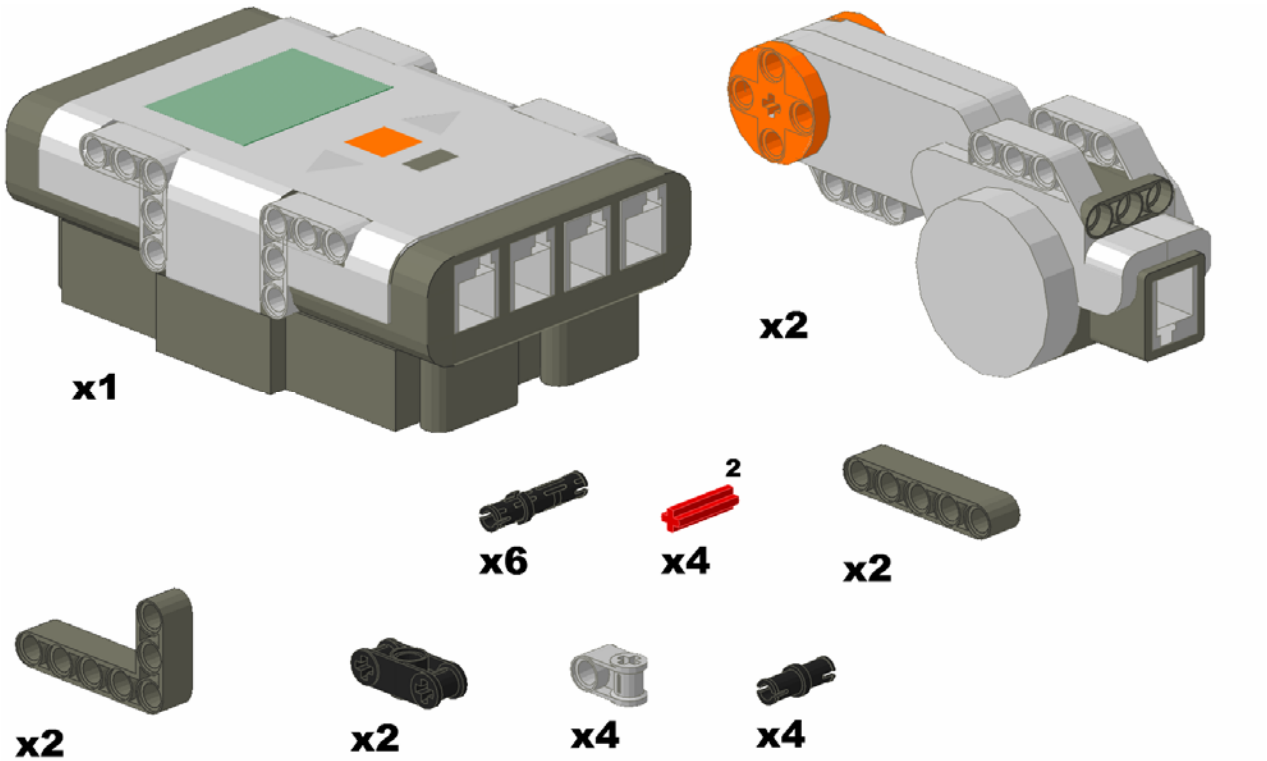

Copyright 2007 LEGOengineering.com & Tufts Center for Engineering Educational Outreach

Step# 1

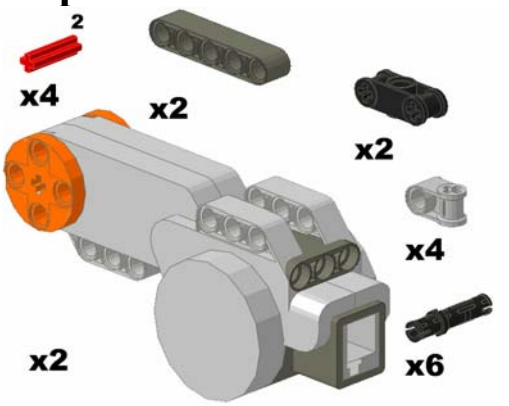

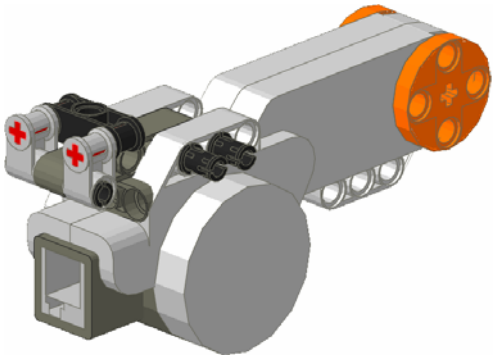

Connect two grey axle joiners to the black axle joiner using two 2 stud axles. Connect the five hole beam to the gray axle joiners using a long friction pin. Then connect the beam to the motor using two more long friction pins. Repeat this process for the second motor.

Step# 2

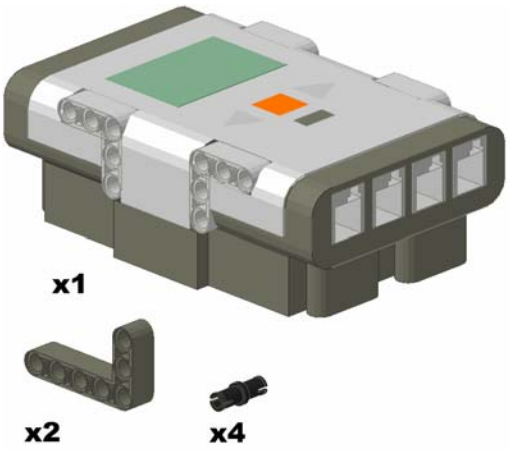

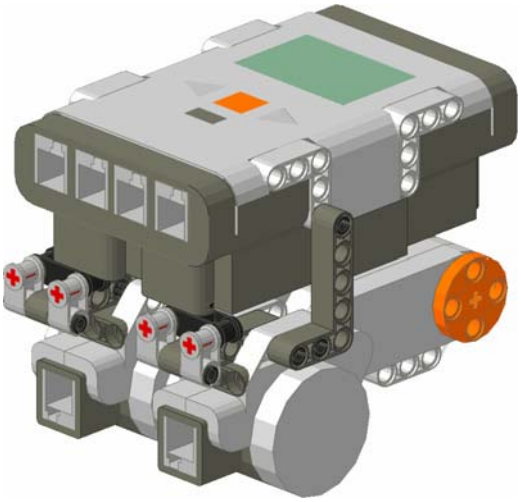

Attach each motor assembly to the bottom of the NXT by the black axle joiner, using a friction pin. Then secure each motor using the bent beam.

Copyright 2007 LEGOengineering.com & Tufts Center for Engineering Educational Outreach

One Step Motor Attachment

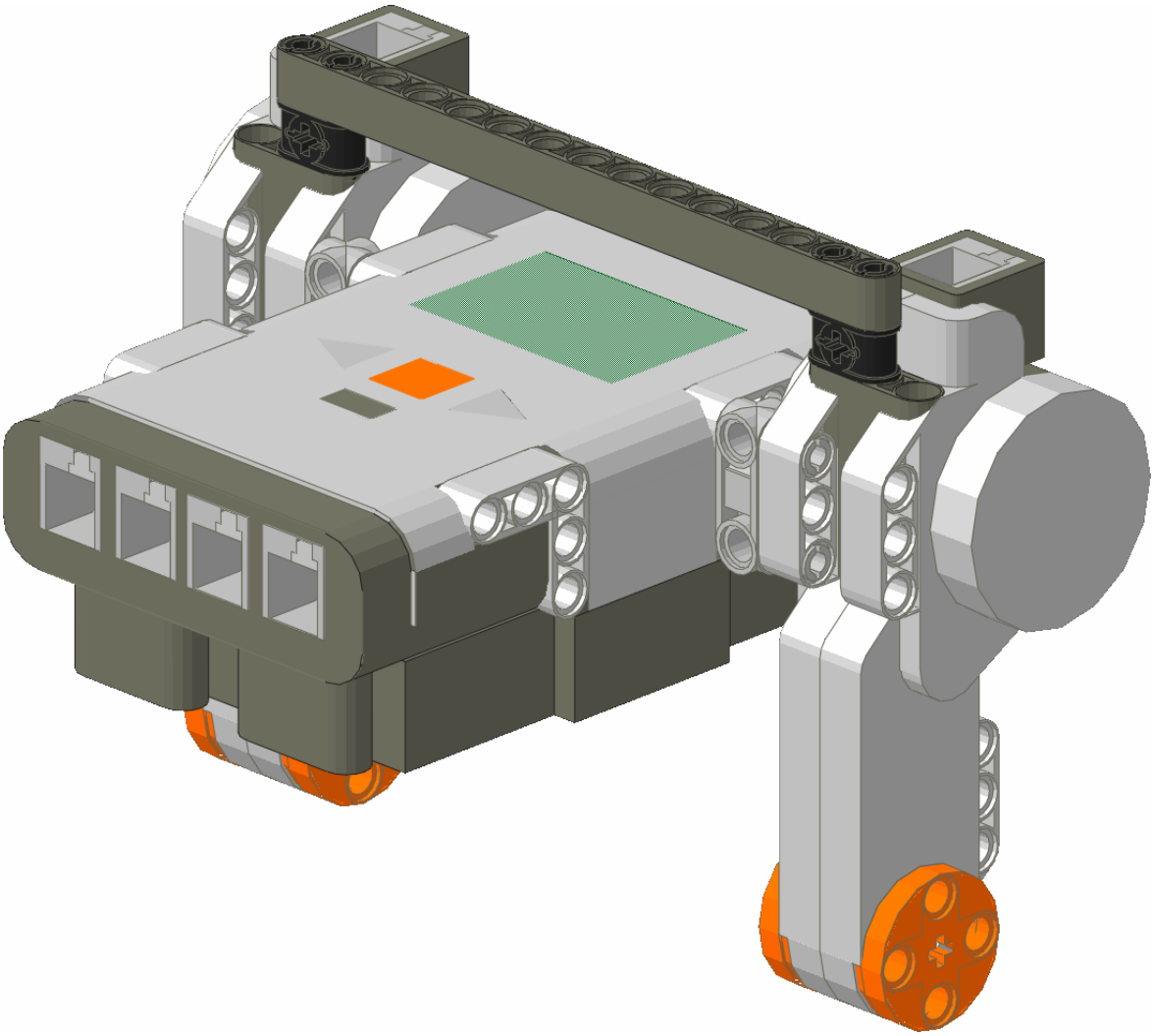

Model Description:

This is a very simple way, using few pieces, to attach motors.

Copyright 2007 LEGOengineering.com & Tufts Center for Engineering Educational Outreach

Step# 1 (and only)

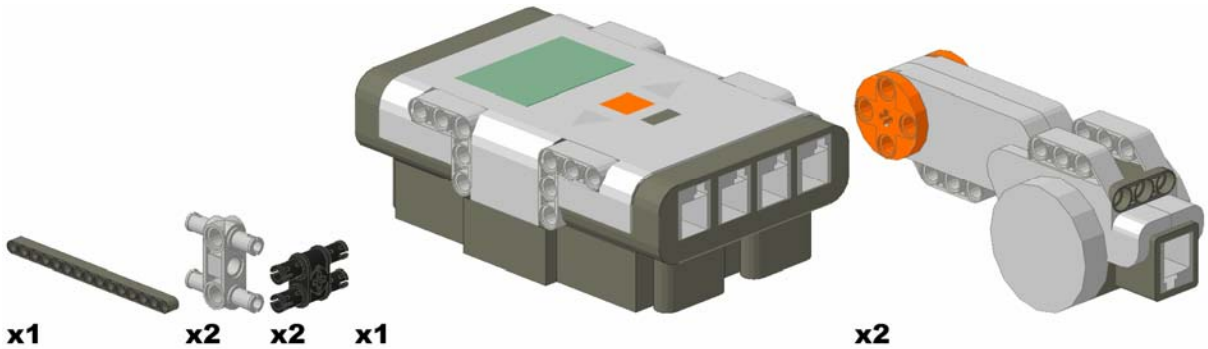

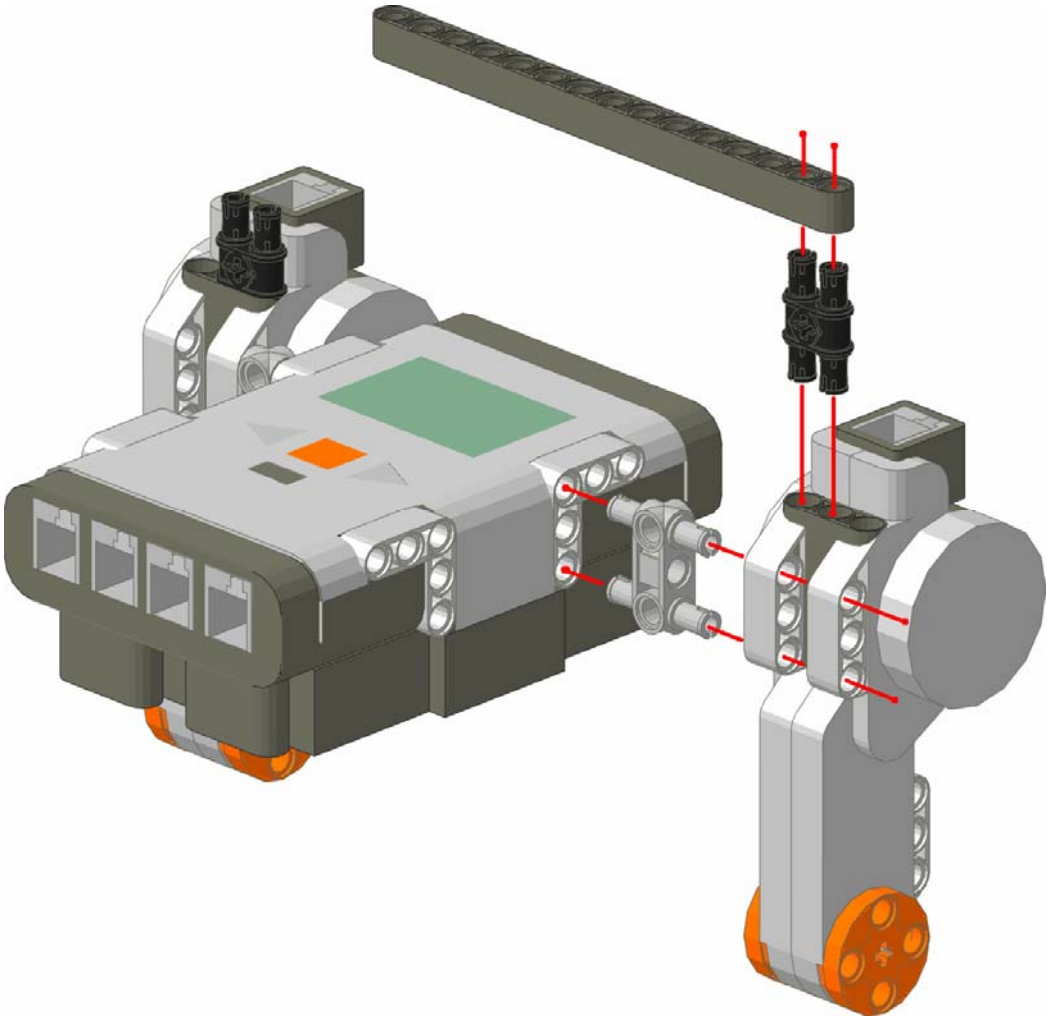

The left and right side are symmetrical.

Copyright 2007 LEGOengineering.com & Tufts Center for Engineering Educational Outreach

Angled Back Attachment

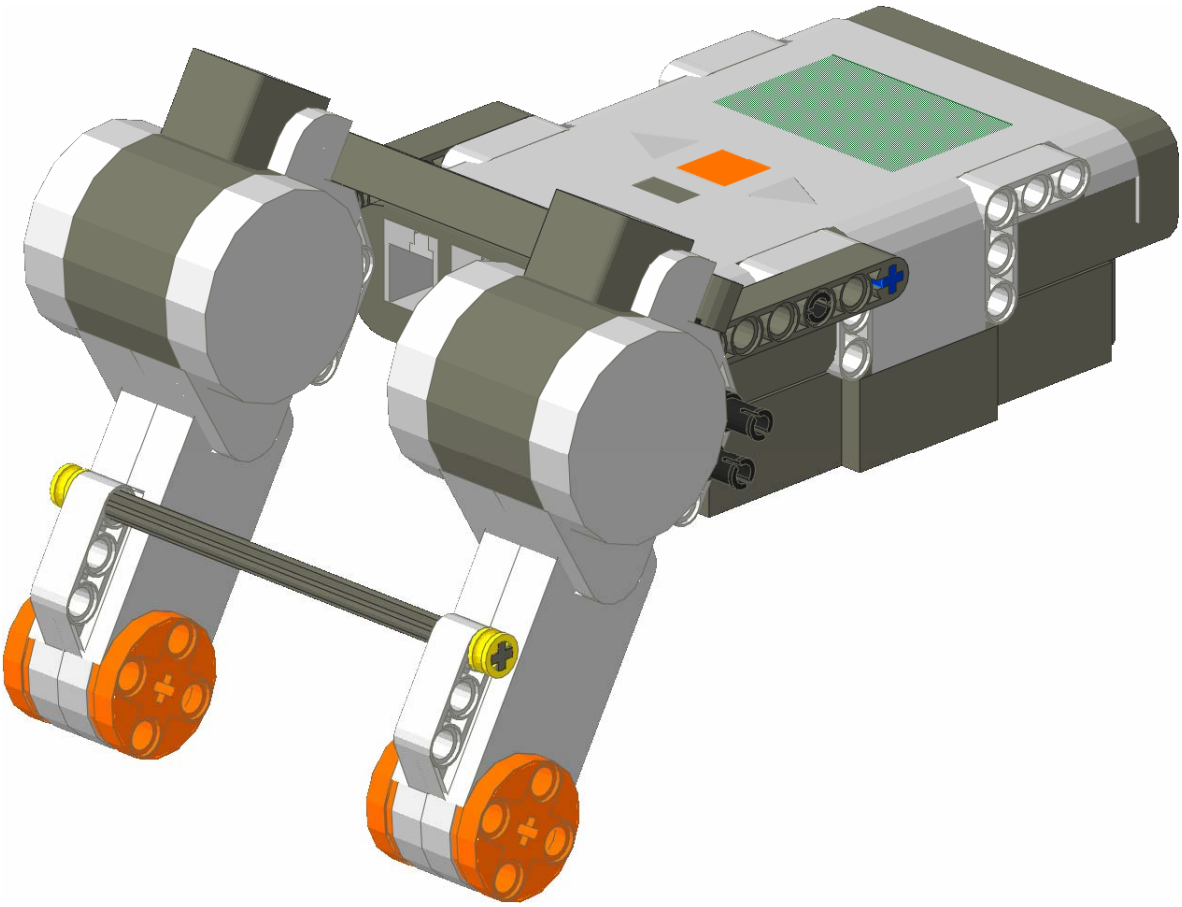

Model Description:

This is a motor attachment option in which the motors angle downward from the NXT. (See Step #2 for side visual.)

Copyright 2007 LEGOengineering.com & Tufts Center for Engineering Educational Outreach

These are the parts that you will need:

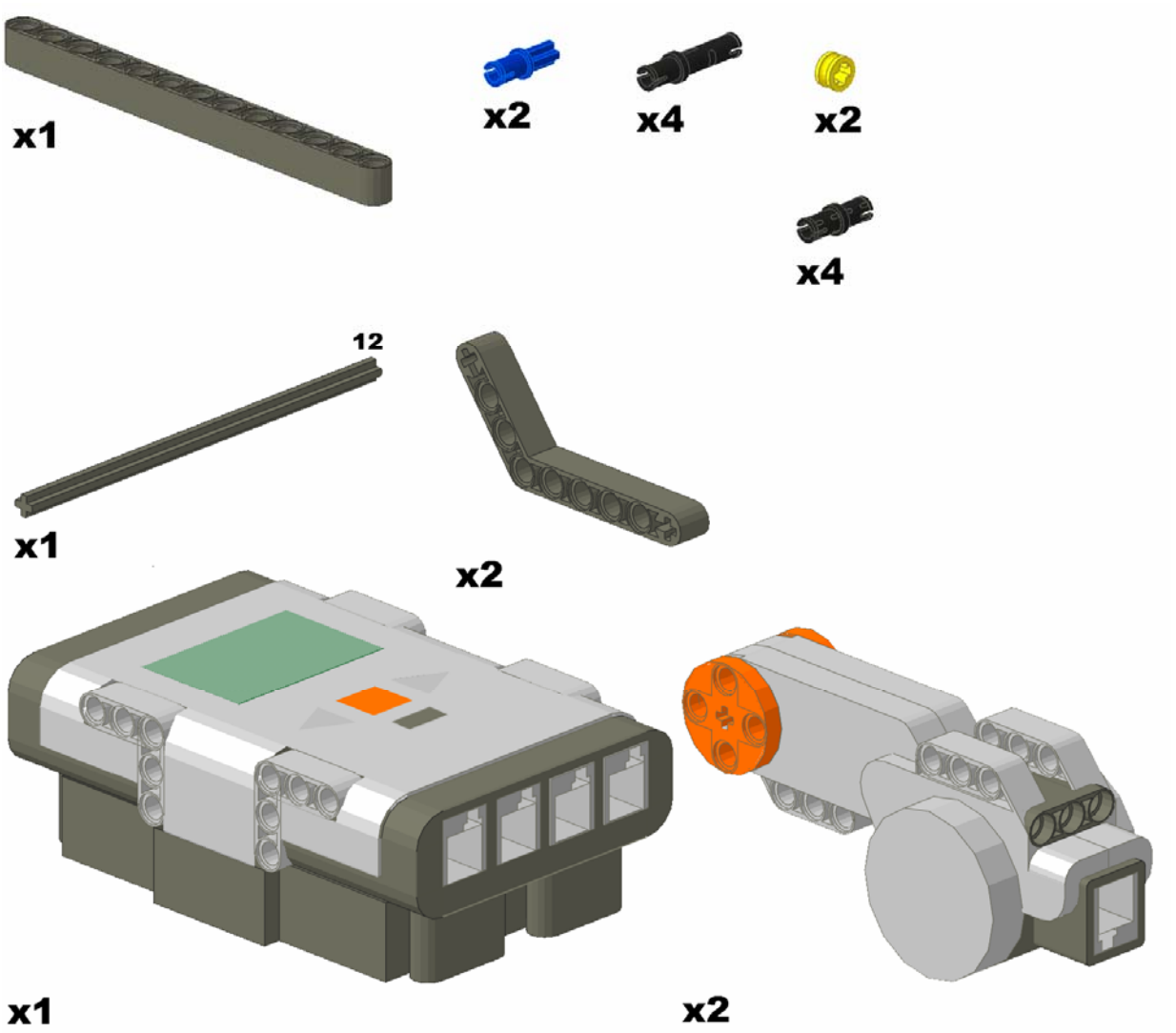

Copyright 2007 LEGOengineering.com & Tufts Center for Engineering Educational Outreach

Step# 1

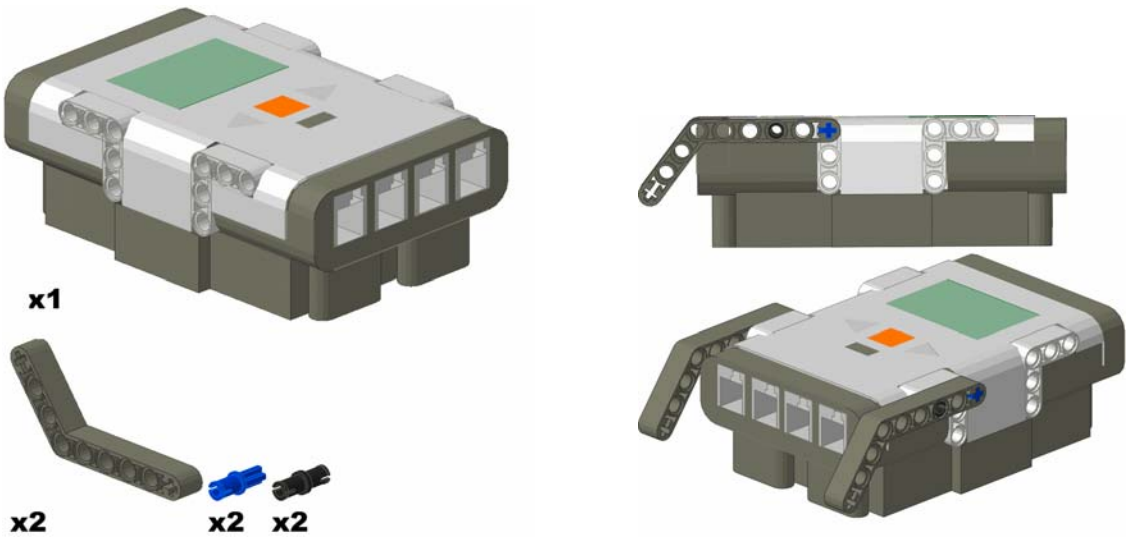

Attach the two bent beams to the NXT using a friction pin and an axle pin on each. The shorter portion of the beam should be sticking out from the NXT.

Step# 2

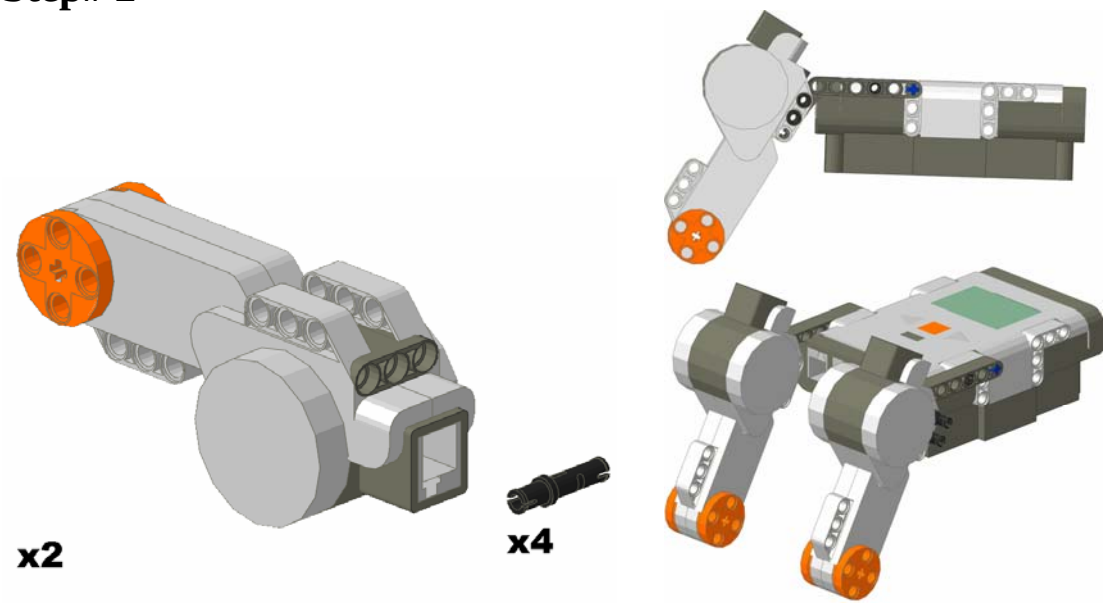

Fasten the motors to the bent beams using the extended pins. Make sure the bent beams are placed in between the two mounting beams on the NXT.

Copyright 2007 LEGOengineering.com & Tufts Center for Engineering Educational Outreach

Step# 3

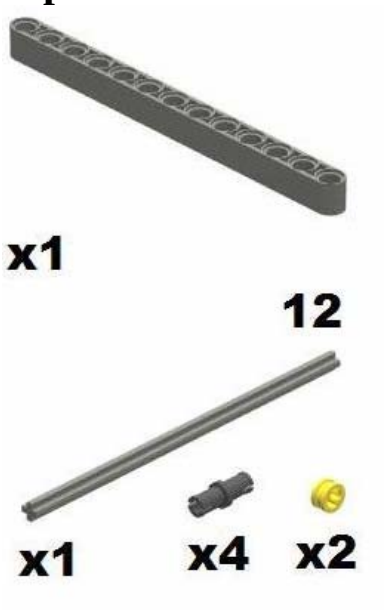

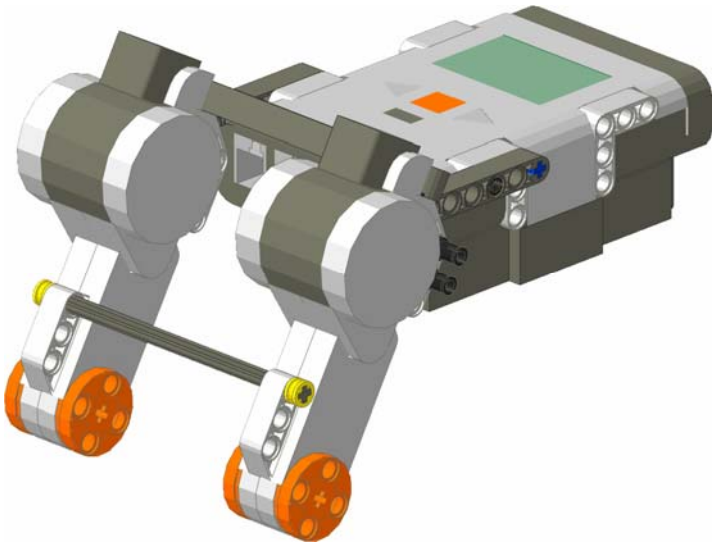

Slide the 12-axle through the mounting beams of the motor and secure it in place with ½ bushes. Use the friction pins to attach the 13-beam across the tops of the motors.

Copyright 2007 LEGOengineering.com & Tufts Center for Engineering Educational Outreach

Sturdy Motor Attachment

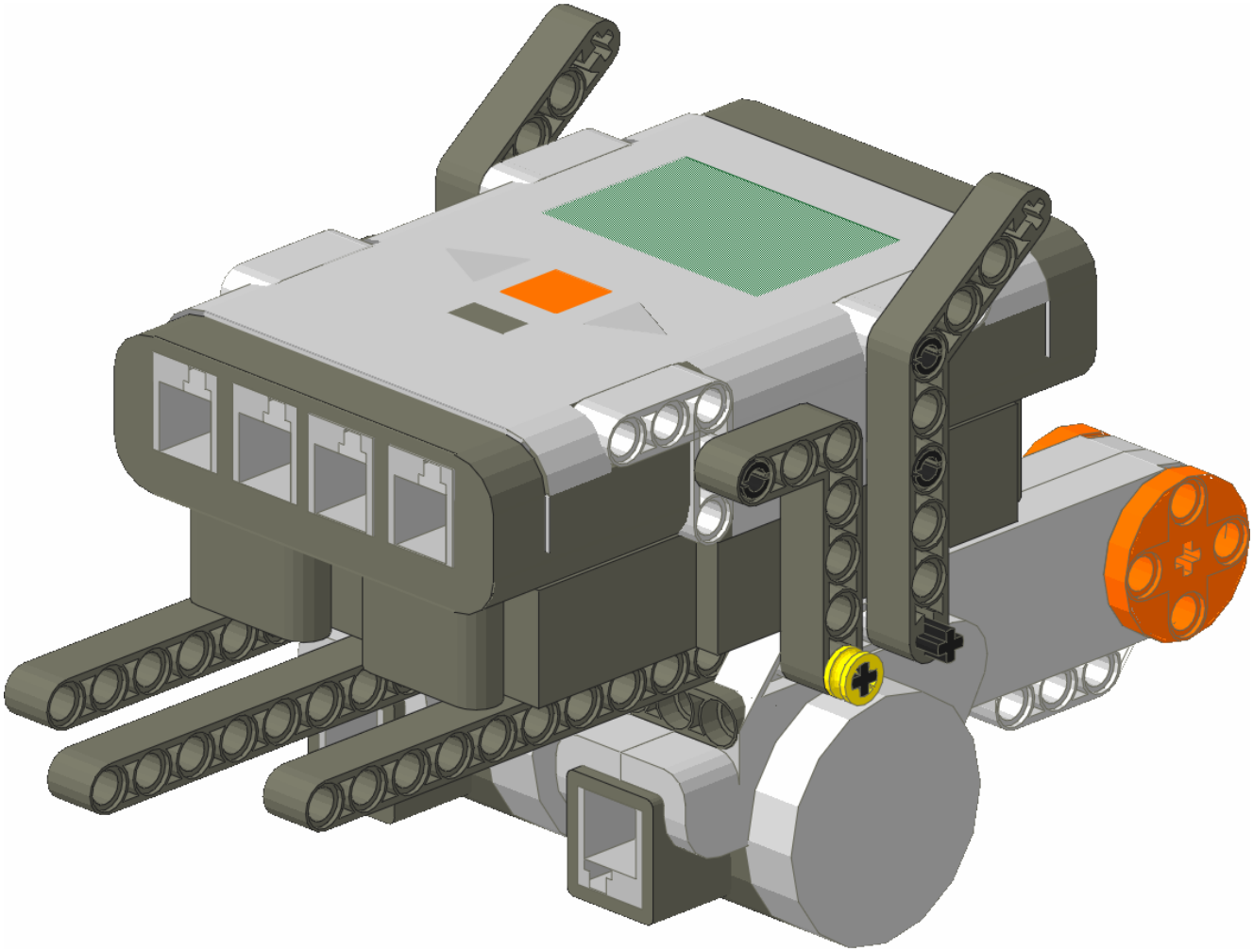

Model Description:

This model is a compact, sturdy, way to attach NXT motors.

Copyright 2007 LEGOengineering.com & Tufts Center for Engineering Educational Outreach

These are the parts that you will need:

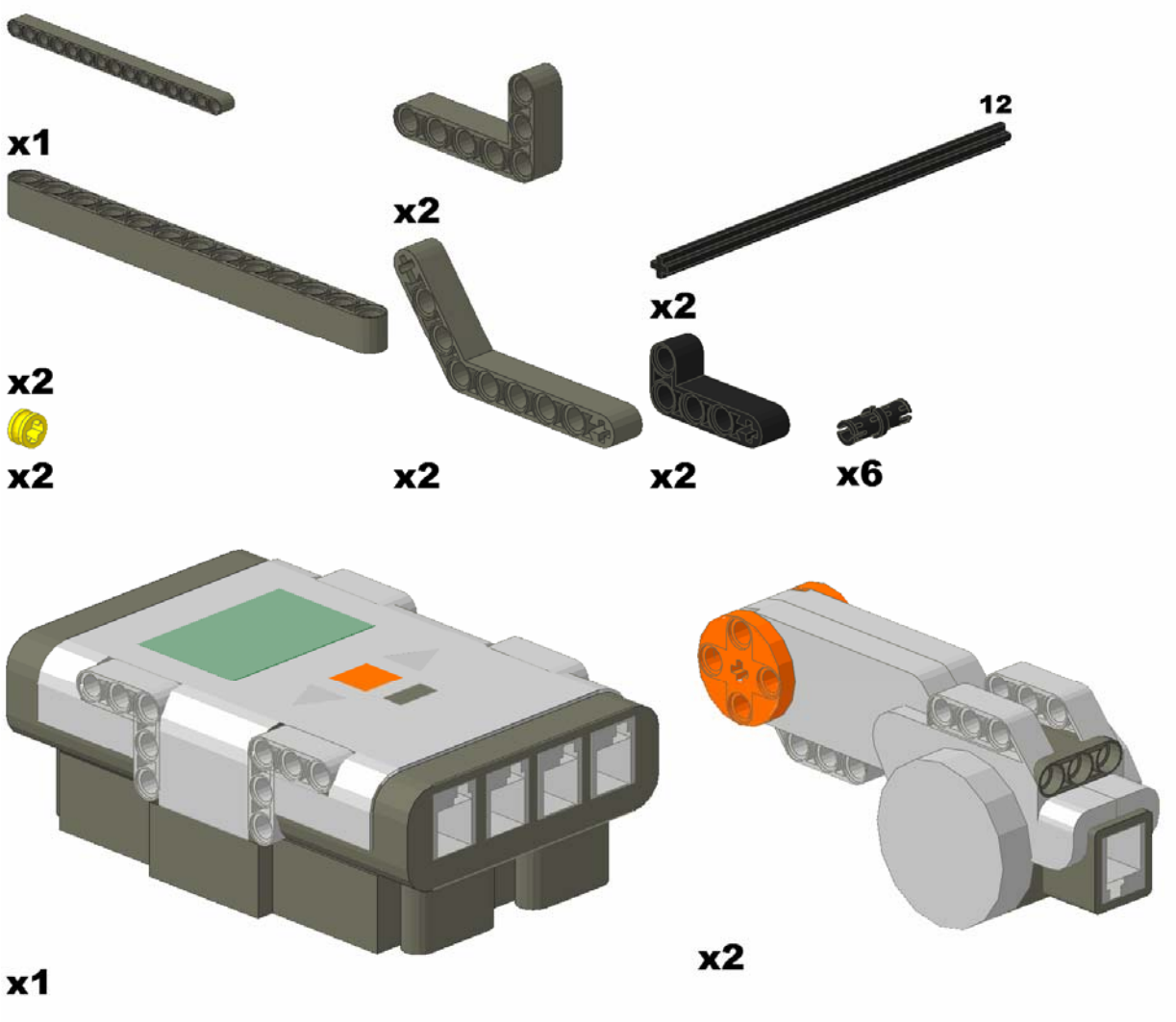

Copyright 2007 LEGOengineering.com & Tufts Center for Engineering Educational Outreach

Step# 1

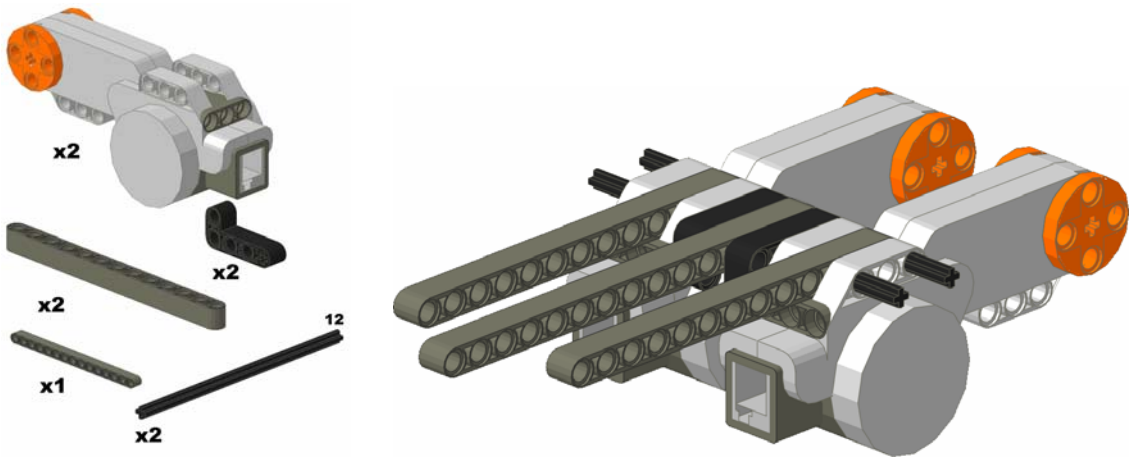

Thread the two 12-axles through the NXT motors, beams, and bent beams.

Step# 2

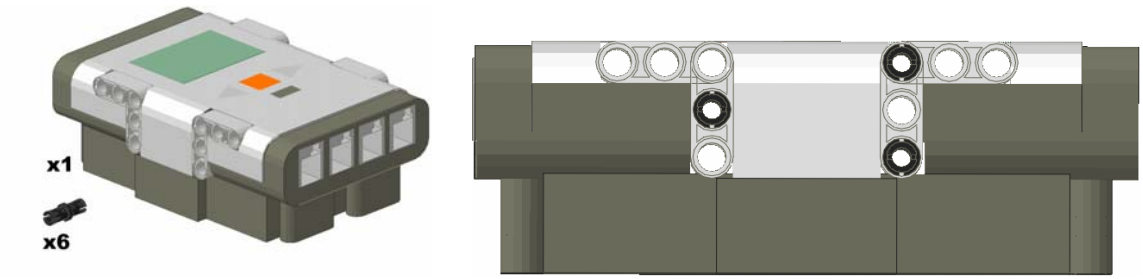

Attach 6 friction pins into the NXT. (3 per side)

Copyright 2007 LEGOengineering.com & Tufts Center for Engineering Educational Outreach

Step# 3

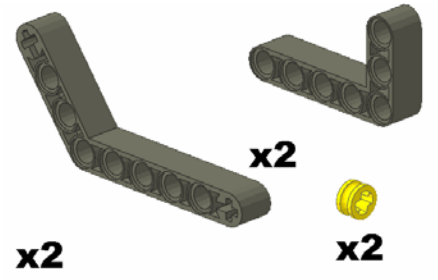

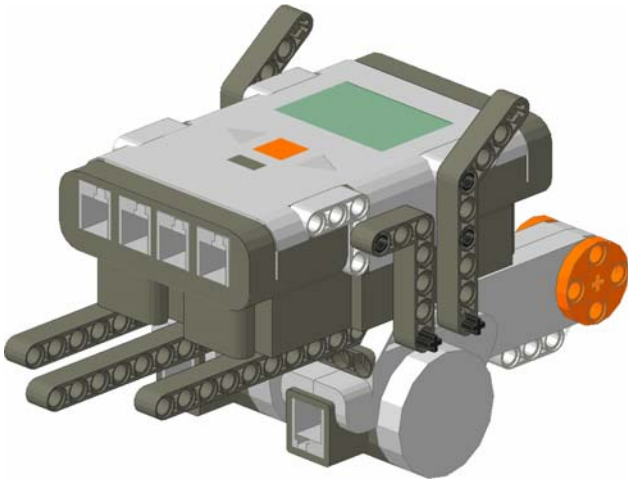

Combine the parts from steps #1 and #2. Attach the bent beams to the friction pins in the NXT and to the axles from step #1. Use a half bush to hold the 3-5 bent beam to the axle. Both sides are symmetrical.

Copyright 2007 LEGOengineering.com & Tufts Center for Engineering Educational Outreach

Wide Back Attachment

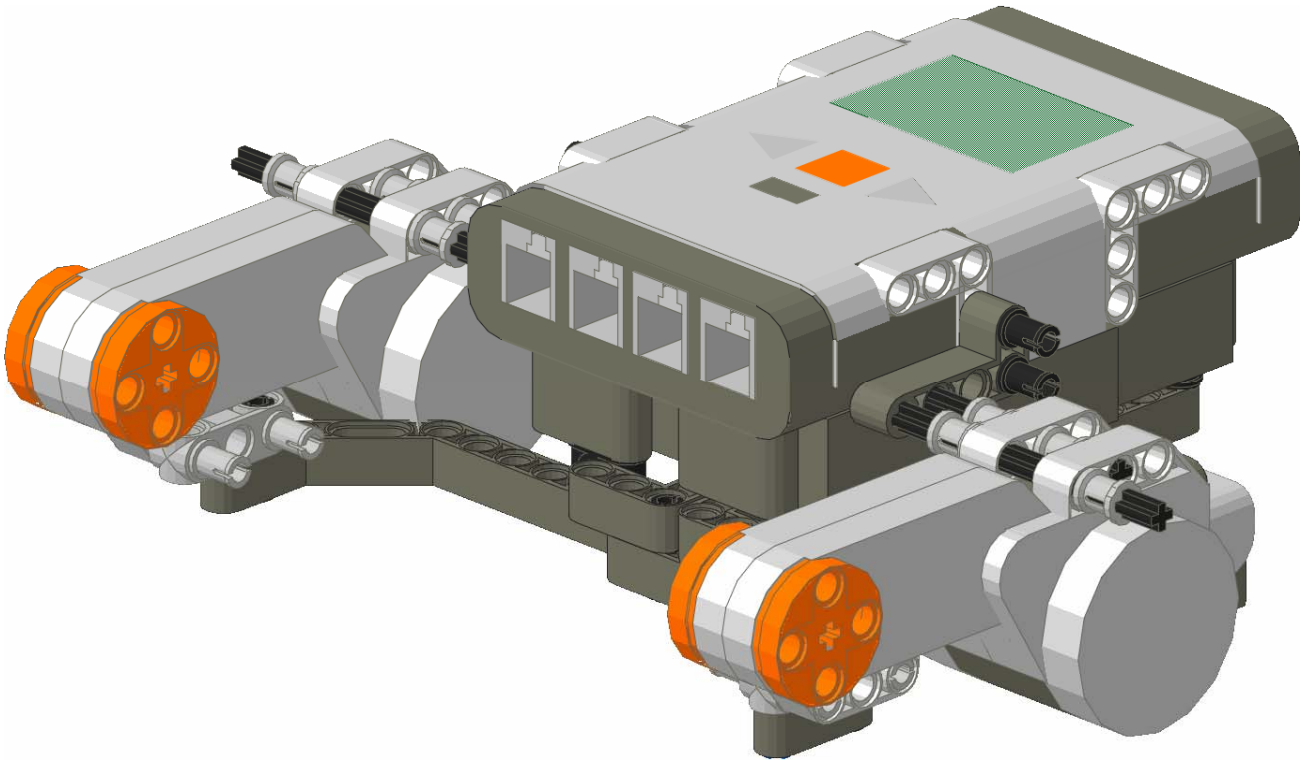

Model Description:

This is a motor attachment option in which the motors are mounted far apart in the back of the NXT.

Copyright 2007 LEGOengineering.com & Tufts Center for Engineering Educational Outreach

These are the parts that you will need:

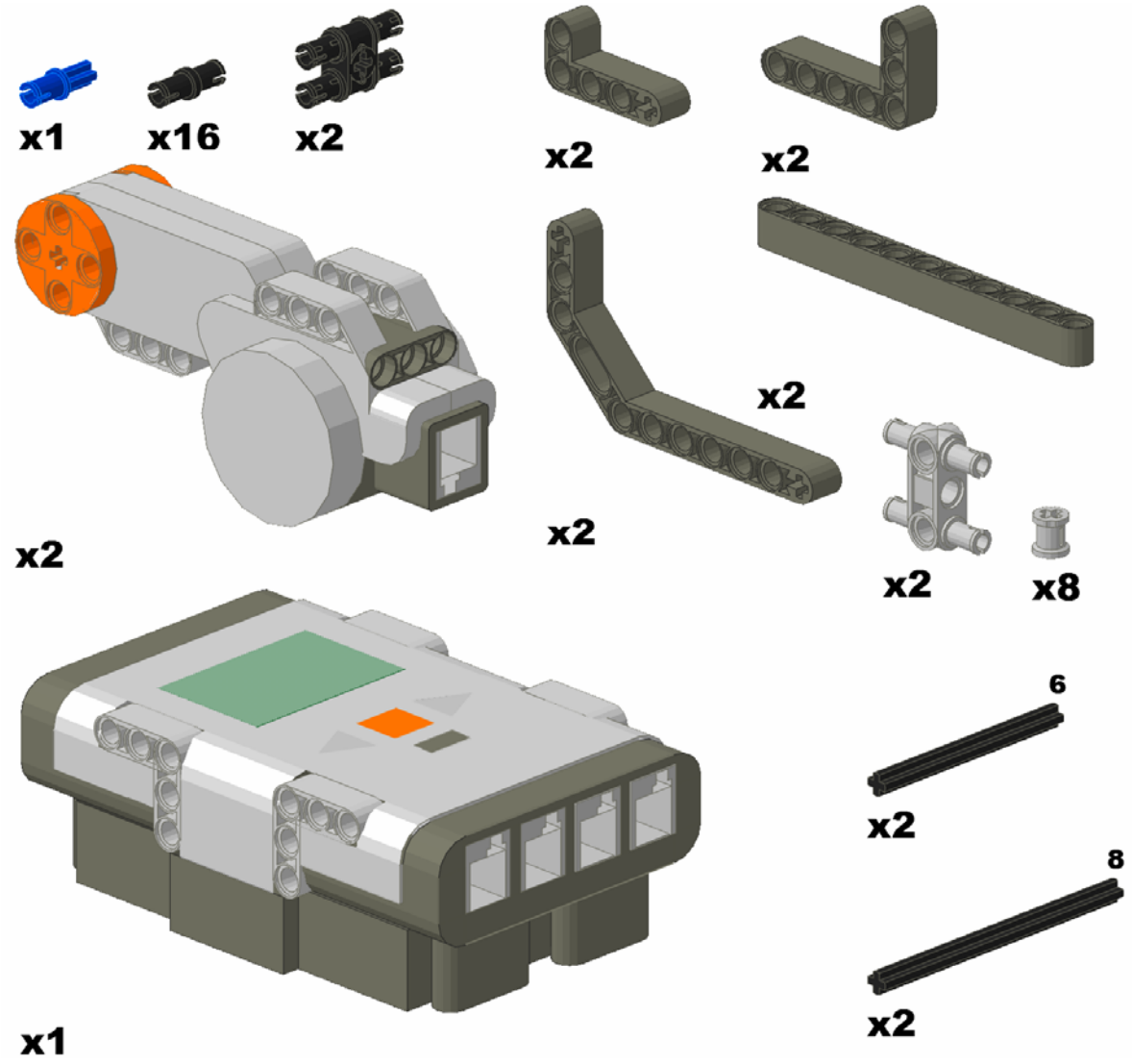

Copyright 2007 LEGOengineering.com & Tufts Center for Engineering Educational Outreach

Step# 1

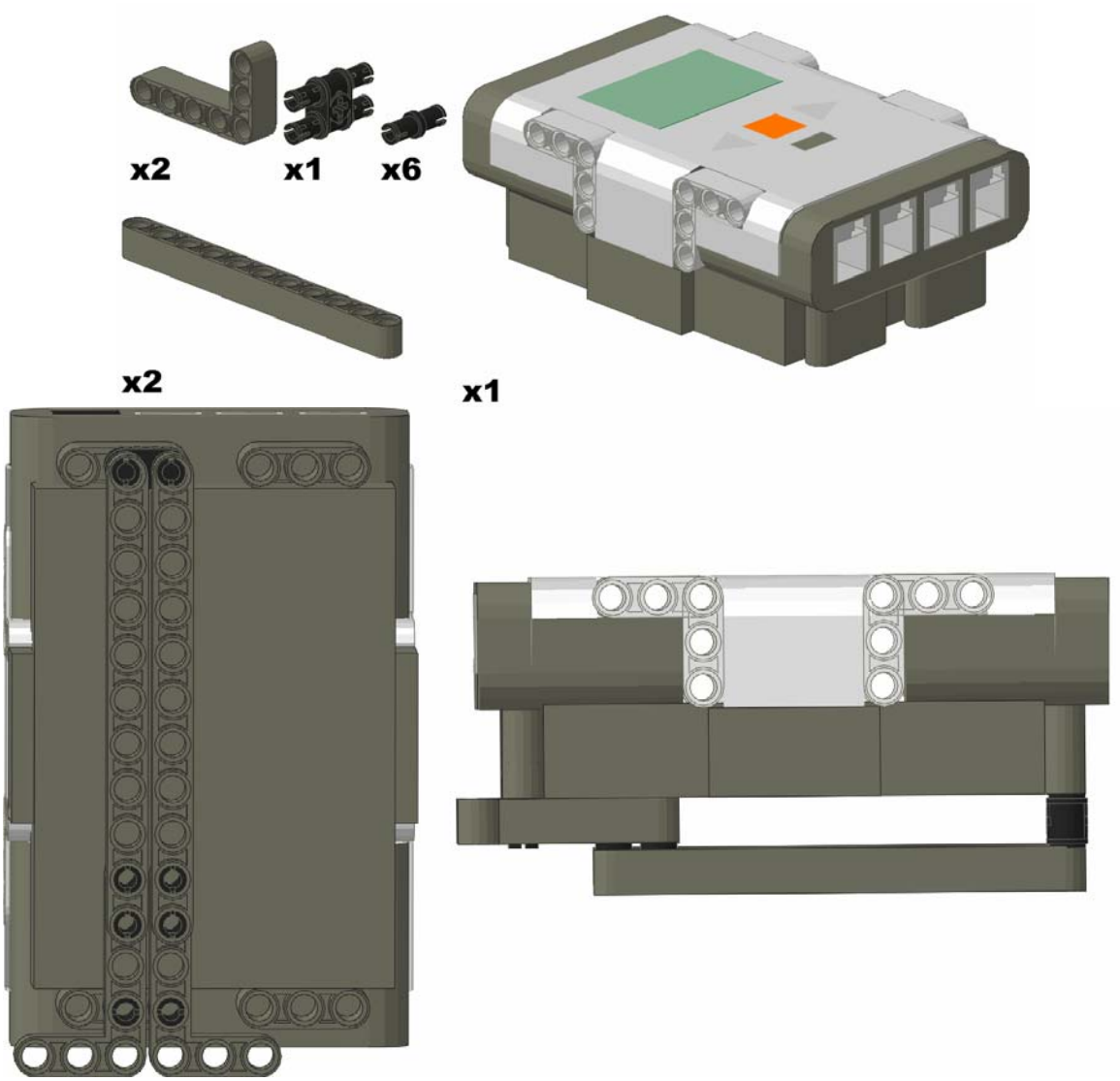

Attach the two bent beams with friction pins to the back of the NXT so that the shorter portion sticks out the back. Then, use the straight beams to attach those to a double pin connector inserted in the front of the NXT.

Copyright 2007 LEGOengineering.com & Tufts Center for Engineering Educational Outreach

Step# 2

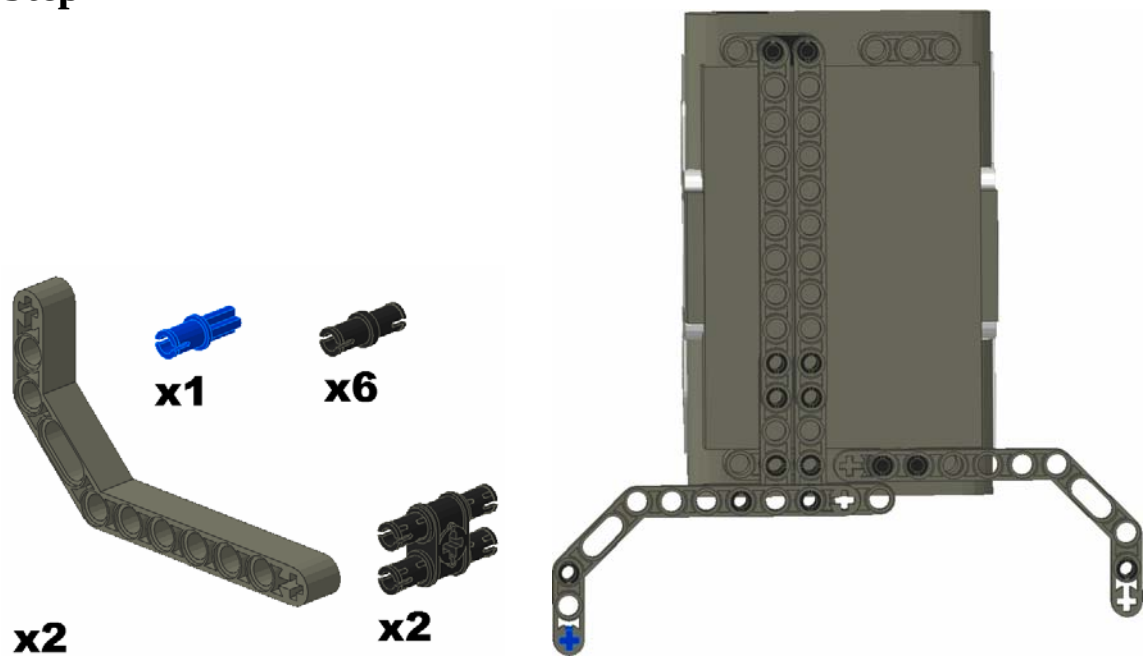

Place the double pin connector in the NXT slots and connect one of the double bent beams to it. Place two pins in the bent beams from step one and connect the other double bent beam to those, leaving one space from the single bent beam uncovered. Lastly, place the appropriate pins in the TOP SIDE of the end of the double bent beams.

Step# 3

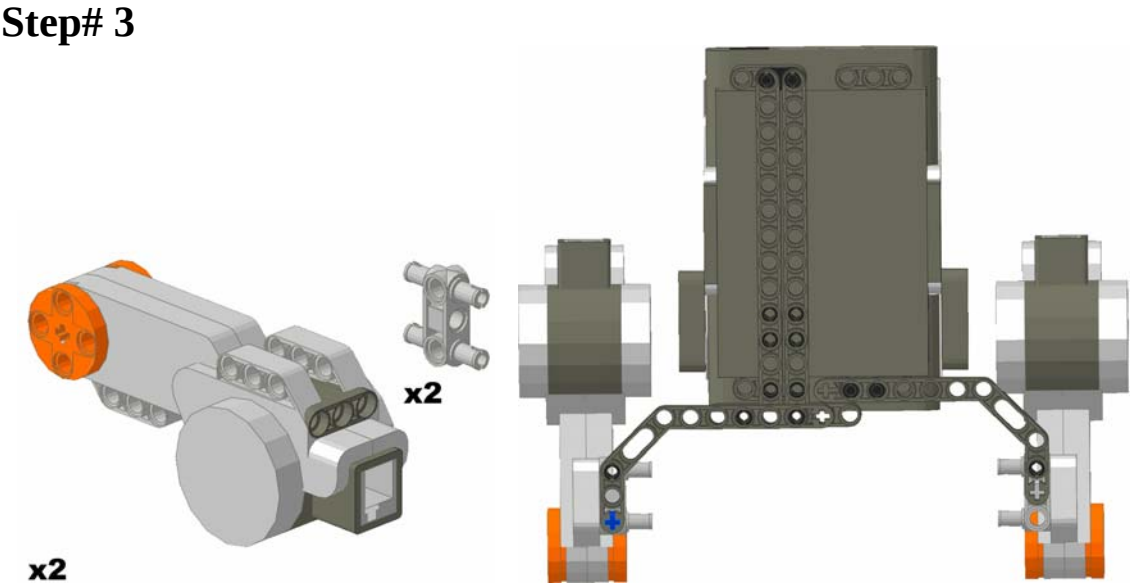

Attach four pin axle joiners to the NXT motors. Then, snap the four pin axle joiners onto the pins sticking up out of the double bent beams.

Copyright 2007 LEGOengineering.com & Tufts Center for Engineering Educational Outreach

Step# 4

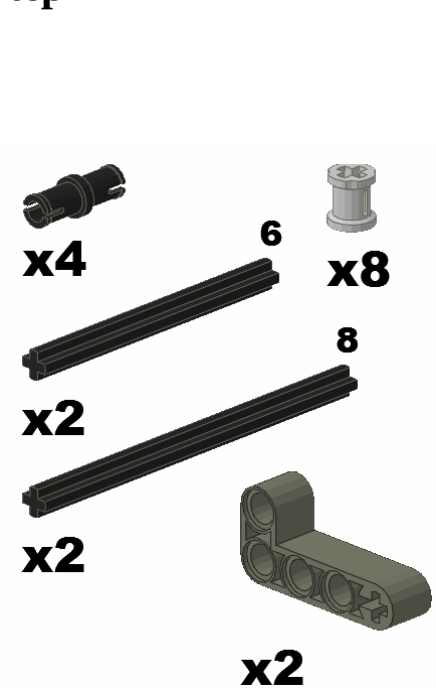

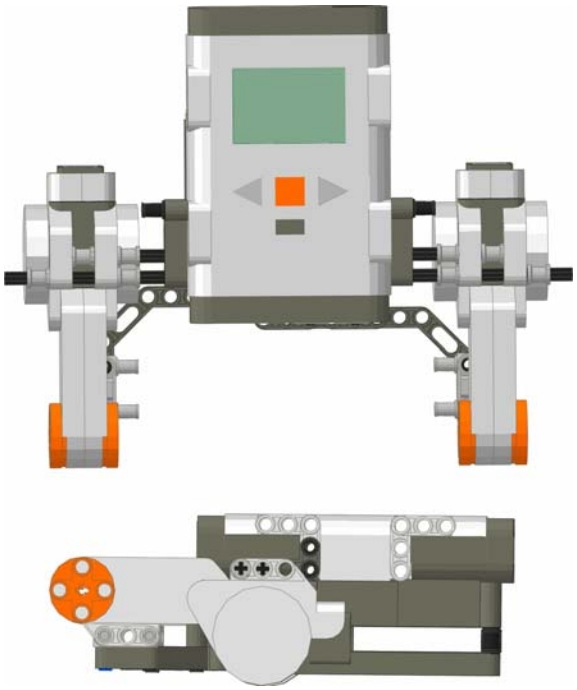

Attach the bent beams to the NXT holes with the friction pins. Have the large portion sticking out backwards. Insert two 8-axles and two 6-axels into the motors and NXT holes. Fasten the motors in place by placing bushes on the axles on both sides of the motor bars.

Copyright 2007 LEGOengineering.com & Tufts Center for Engineering Educational Outreach

Compact Motor Attachment

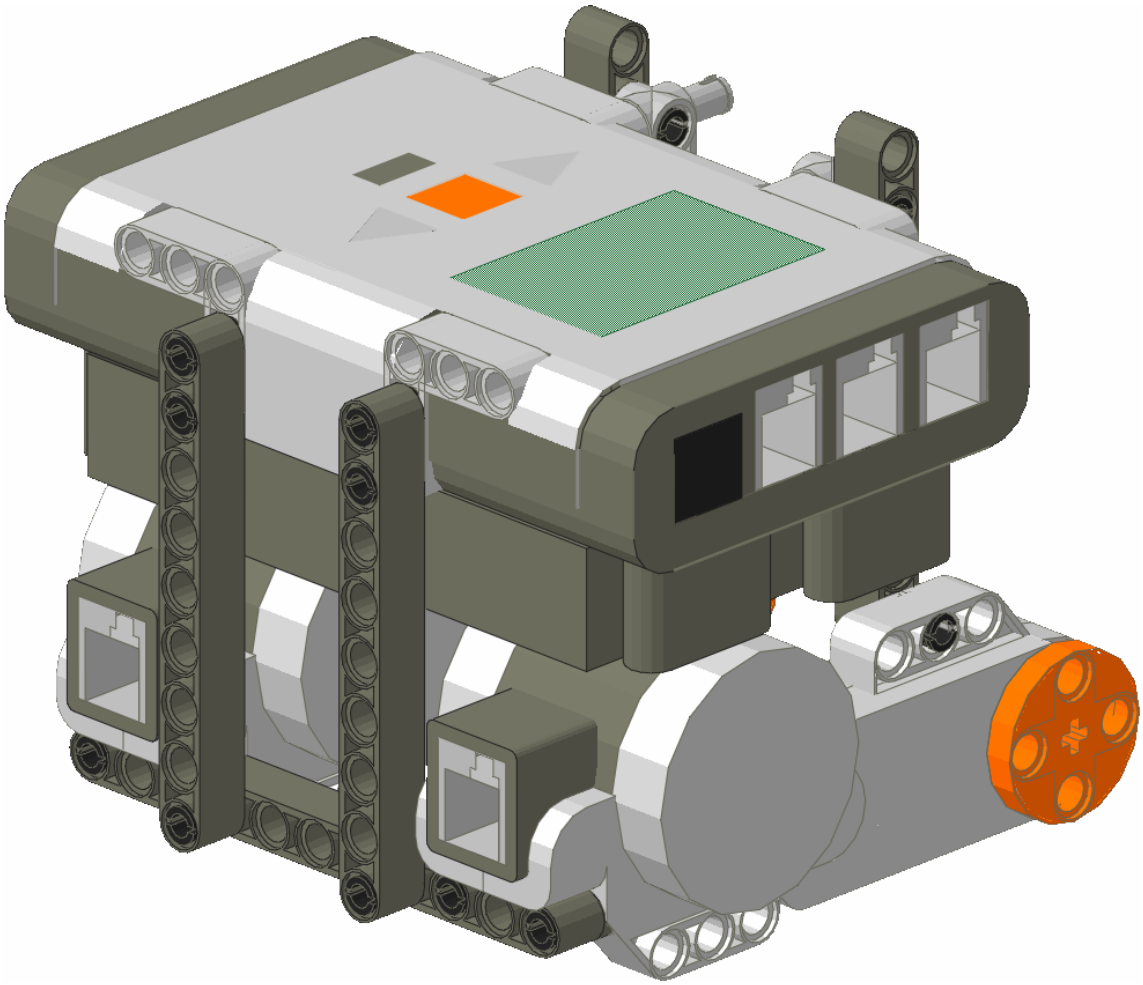

Model Description:

This is a simple, compact way of attaching motors to the NXT.

Copyright 2007 LEGOengineering.com & Tufts Center for Engineering Educational Outreach

These are the parts that you will need:

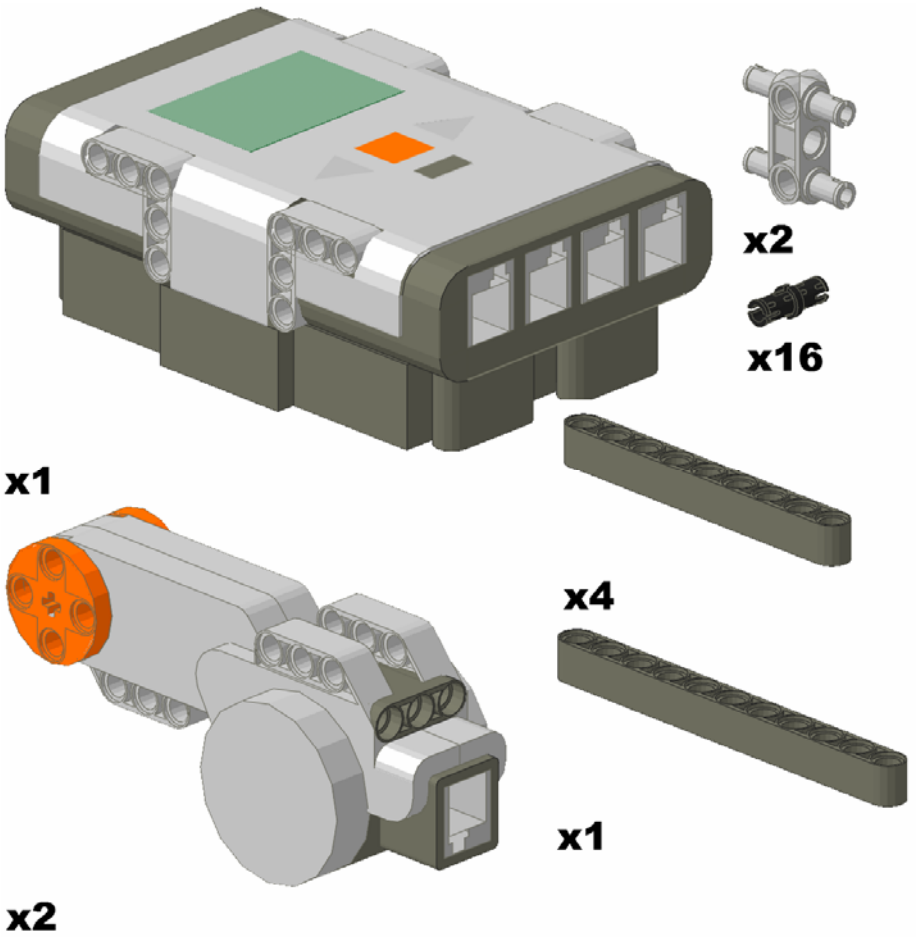

Copyright 2007 LEGOengineering.com & Tufts Center for Engineering Educational Outreach

Step# 1

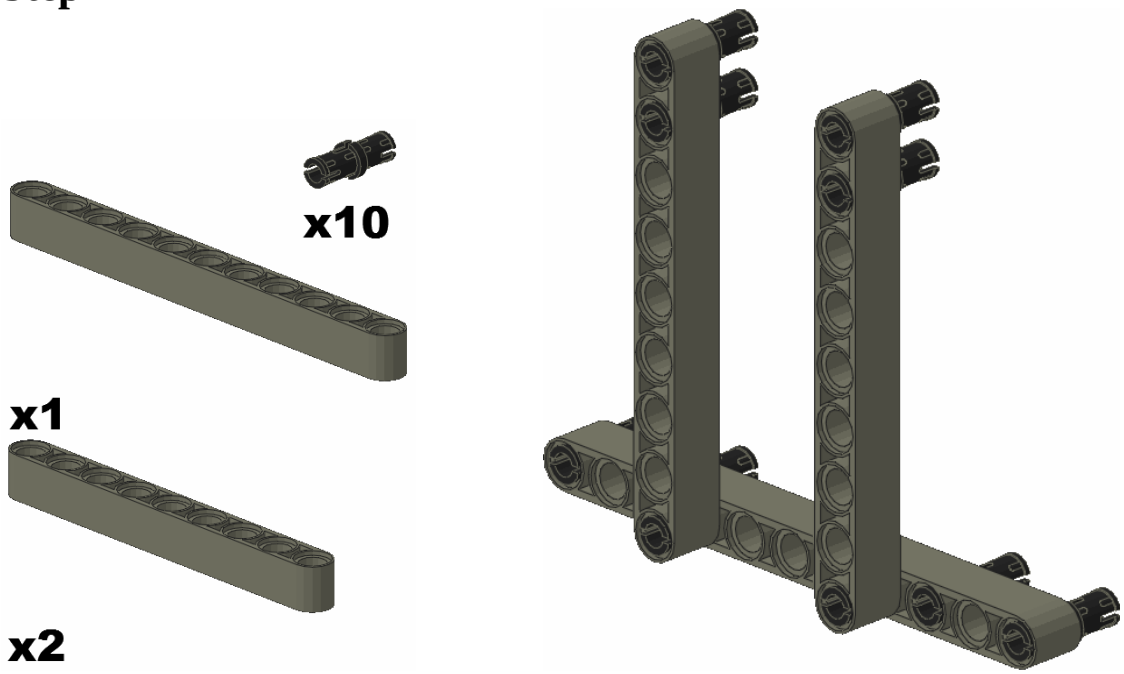

Replacing the 2 vertical beams with longer beams, and having those hang below the horizontal beam might be a good set up for a different build.

Step# 2

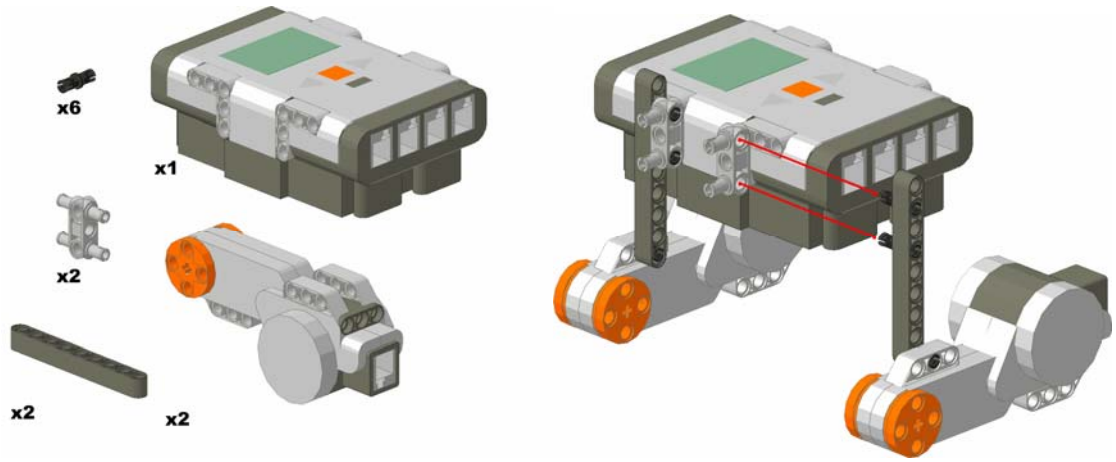

In the diagram above, the right motor and beam is extended out, to provide an intermediary step.

Copyright 2007 LEGOengineering.com & Tufts Center for Engineering Educational Outreach

Step# 3

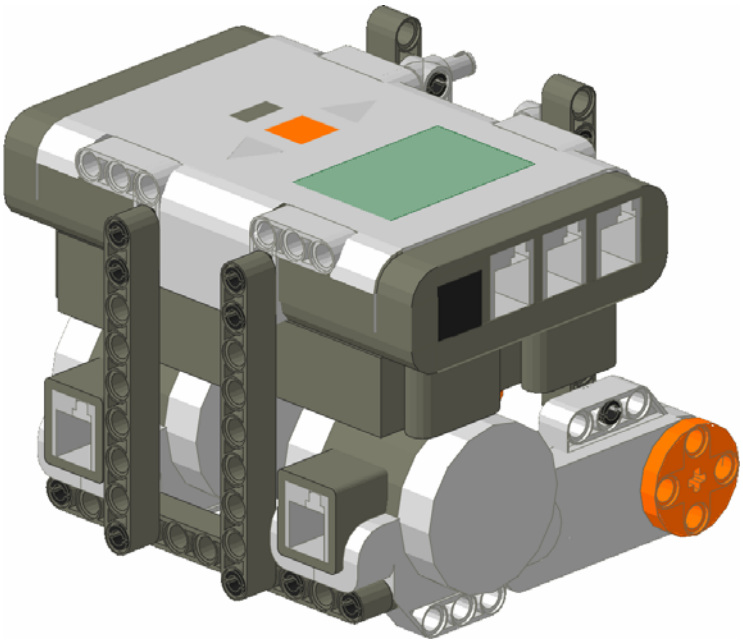

Attach the part from step #1 to the part from step #2 so that the beams from the first step connect to the back of the motors.

Copyright 2007 LEGOengineering.com & Tufts Center for Engineering Educational Outreach

Vertical Motor Attachment

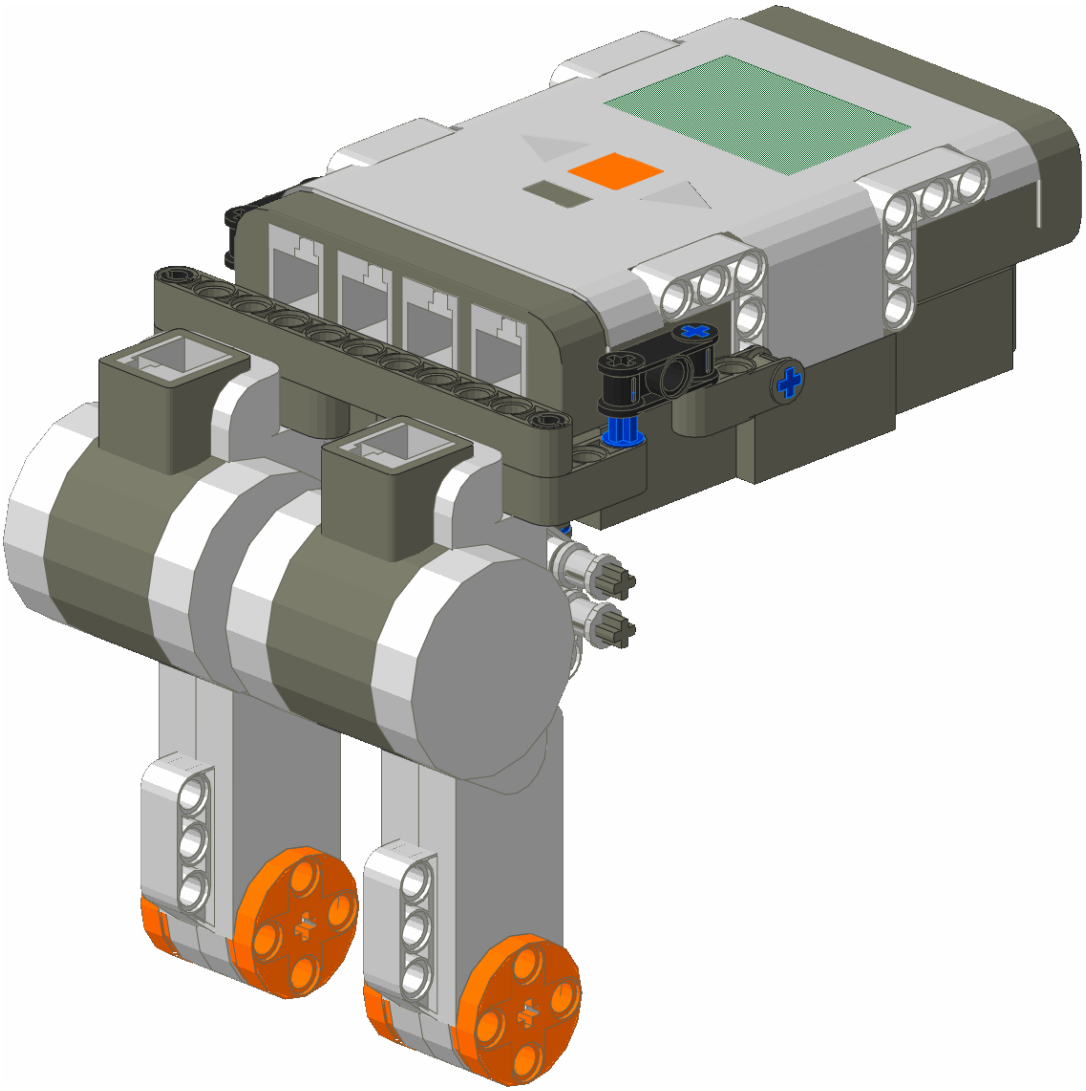

Model Description:

This is a motor attachment option in which two motors are held vertically

Copyright 2007 LEGOengineering.com & Tufts Center for Engineering Educational Outreach

These are the parts that you will need:

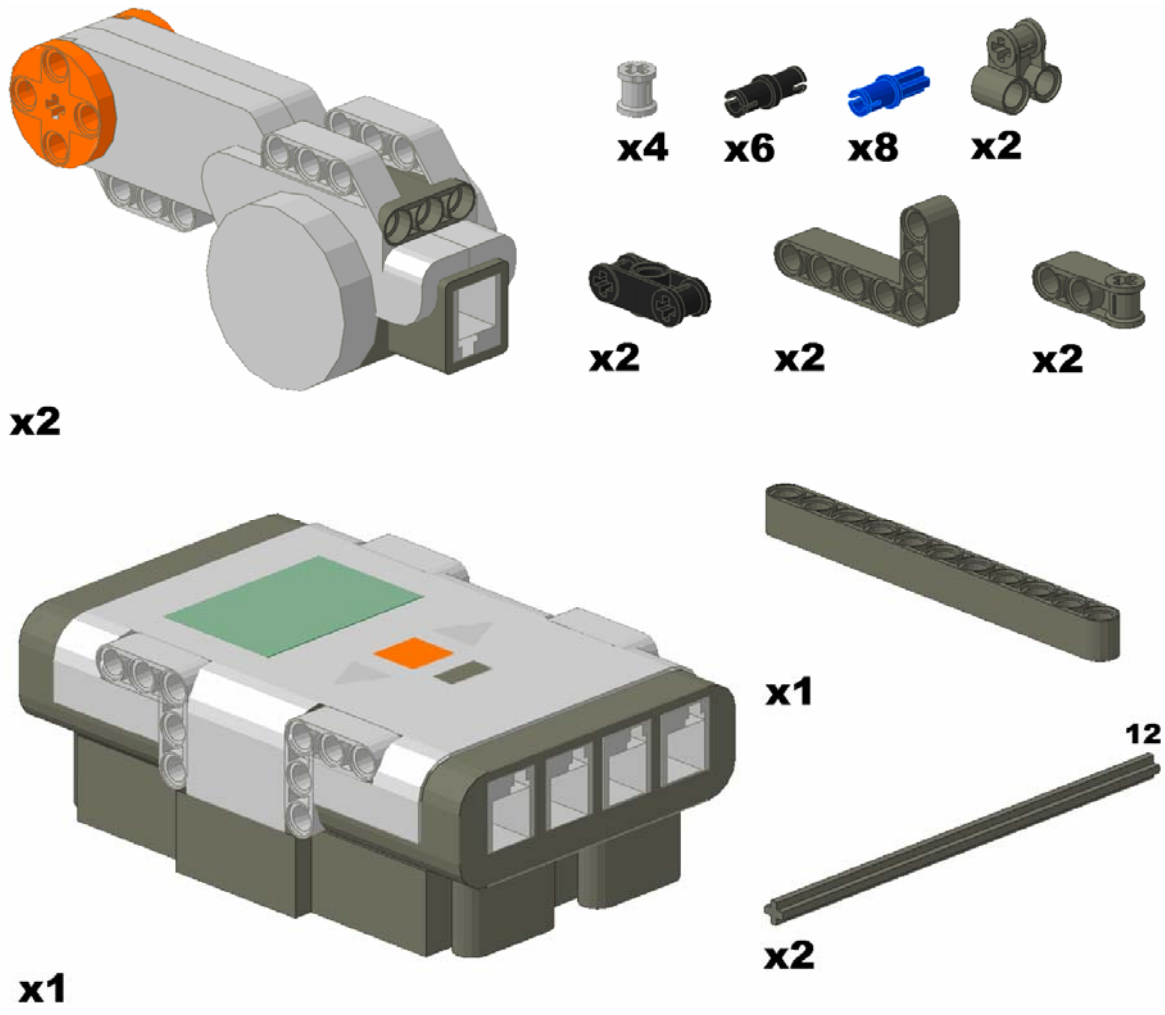

Copyright 2007 LEGOengineering.com & Tufts Center for Engineering Educational Outreach

Step# 1

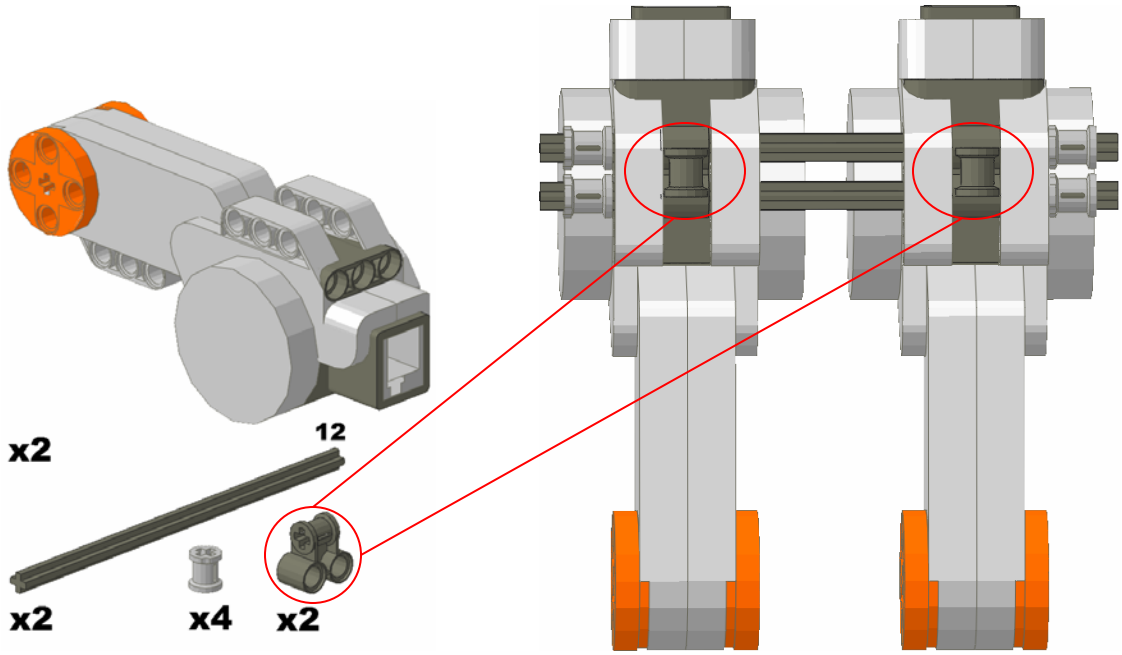

Insert the two axles through the top two holes of the motors and the double axle joiners simultaneously. The double axle joiners should be in between the two axle holding bars on each motor. Secure the bars with the bushes.

Step# 2

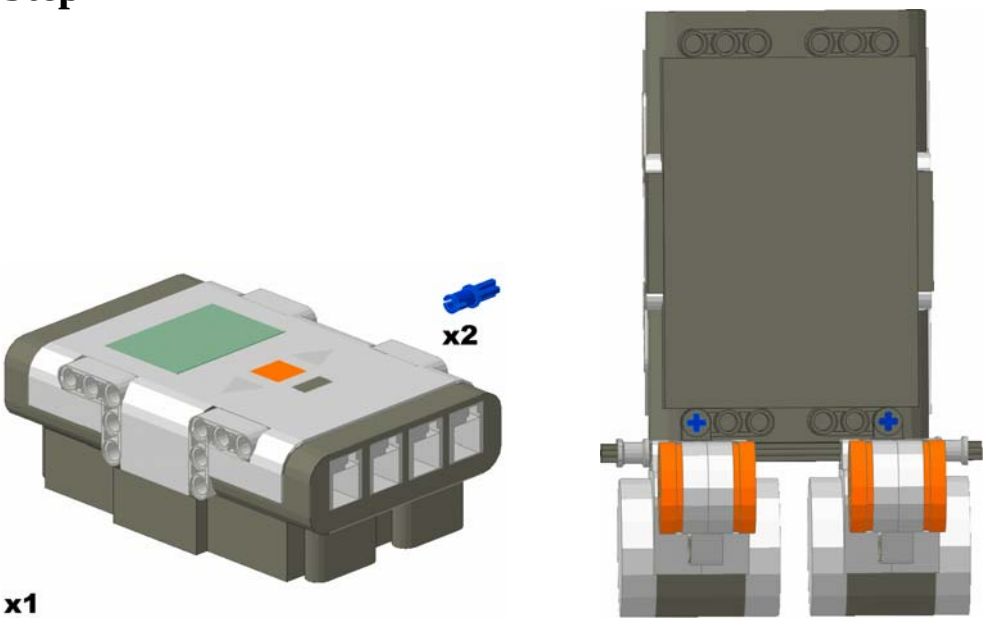

Attach the double axle joiners to the underside of the NXT using two axle pins.

Copyright 2007 LEGOengineering.com & Tufts Center for Engineering Educational Outreach

Step# 3

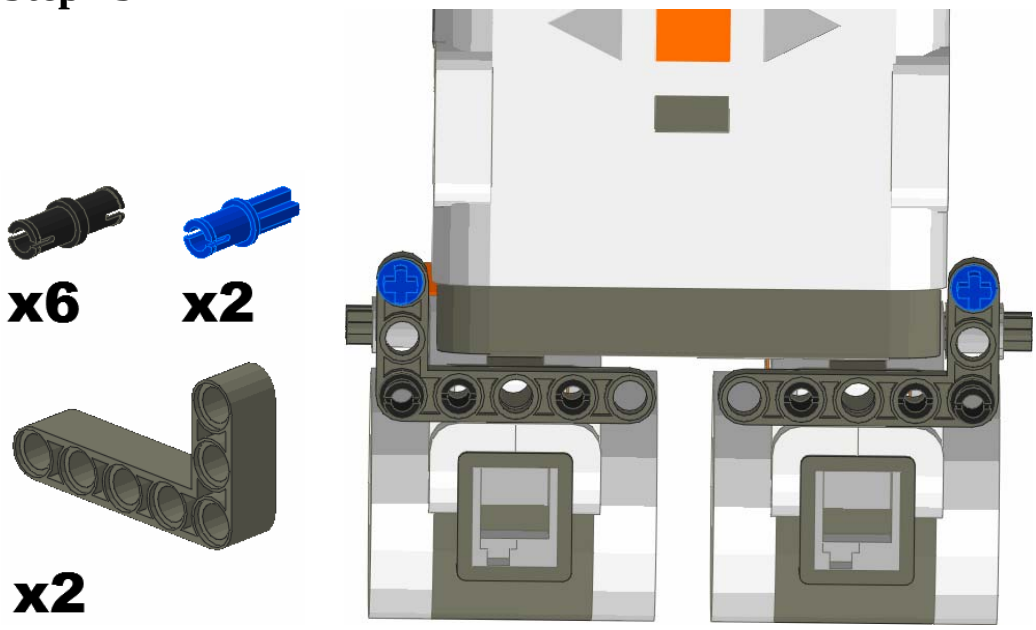

Use two black pins to attach each of the two bent beams to the tops of the motors. Then place a black pin in the corner of each bent beam and an axle pin in the end.

Step# 4

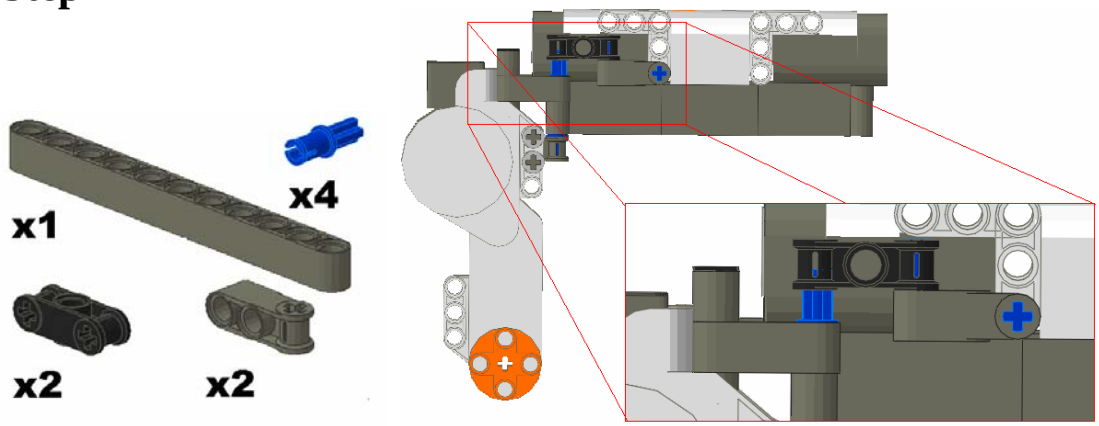

Link the bent beams from step three to the NXT using the axle pins and the two linking pieces. Push all the pieces completely down on the pins. Then, attach the straight beam to the top of the bent beams above the motors using the pins already placed in during step three.

Copyright 2007 LEGOengineering.com & Tufts Center for Engineering Educational Outreach

Swiveling Front Attachment

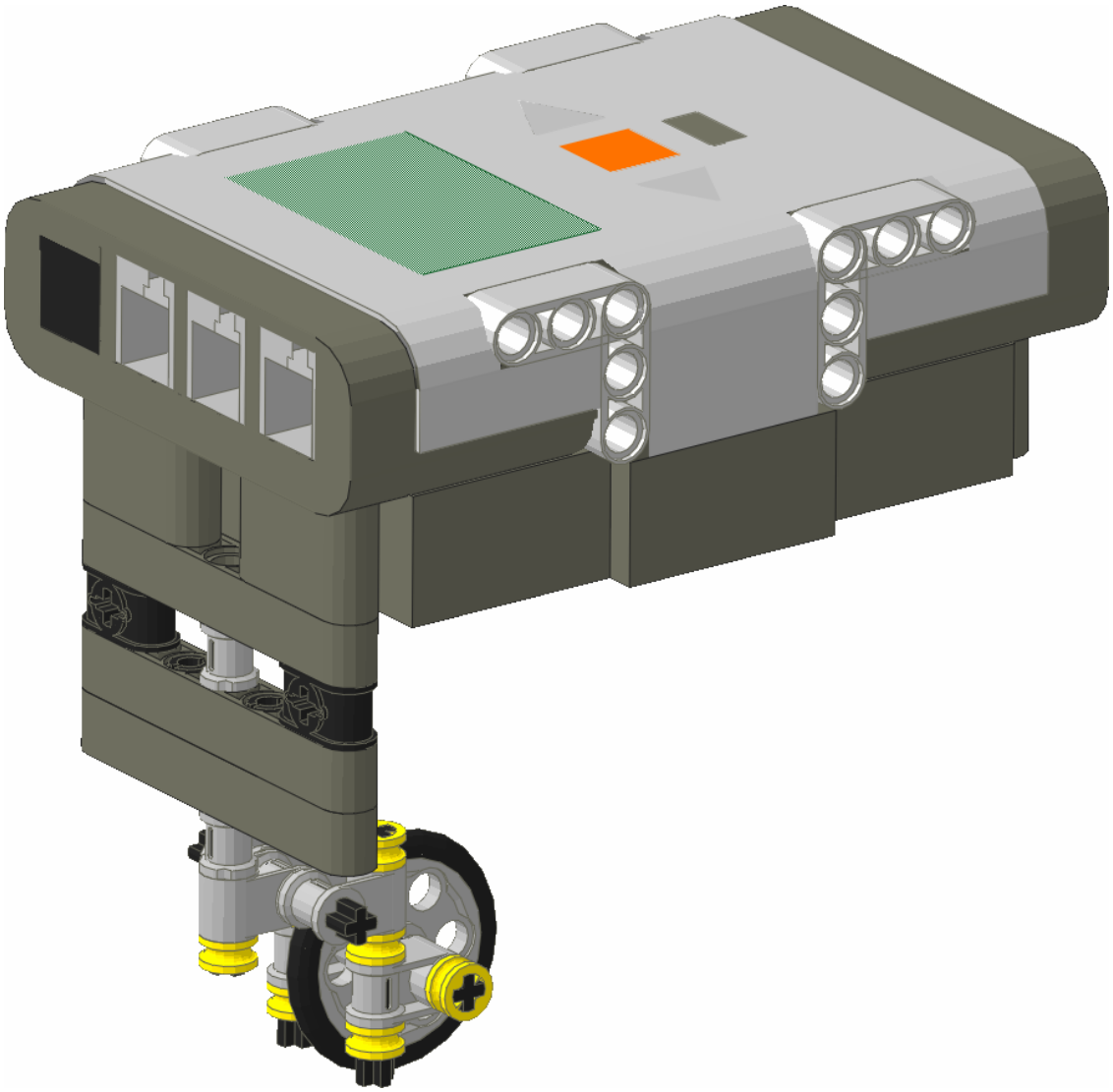

Model Description:

This is a front wheel attachment option in which one small wheel has the ability to swivel. This allows the car to turn easily.

Copyright 2007 LEGOengineering.com & Tufts Center for Engineering Educational Outreach

These are the parts that you will need:

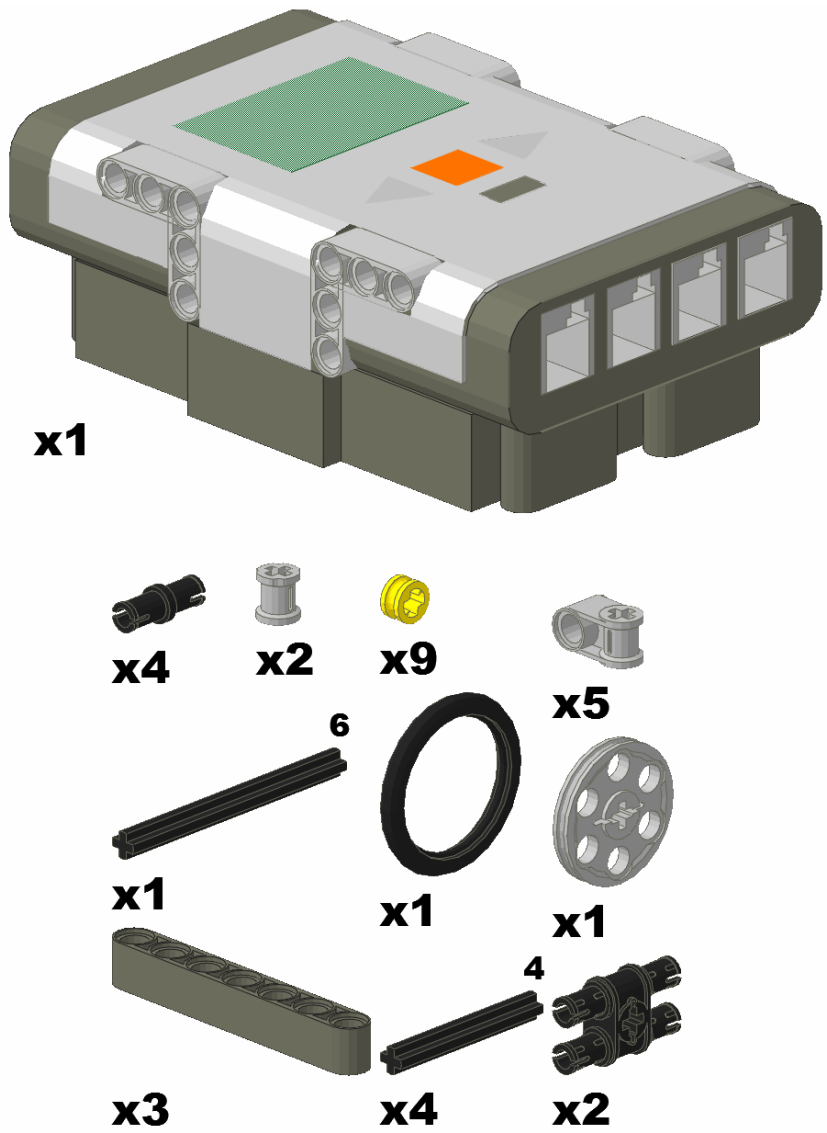

Copyright 2007 LEGOengineering.com & Tufts Center for Engineering Educational Outreach

Step# 1

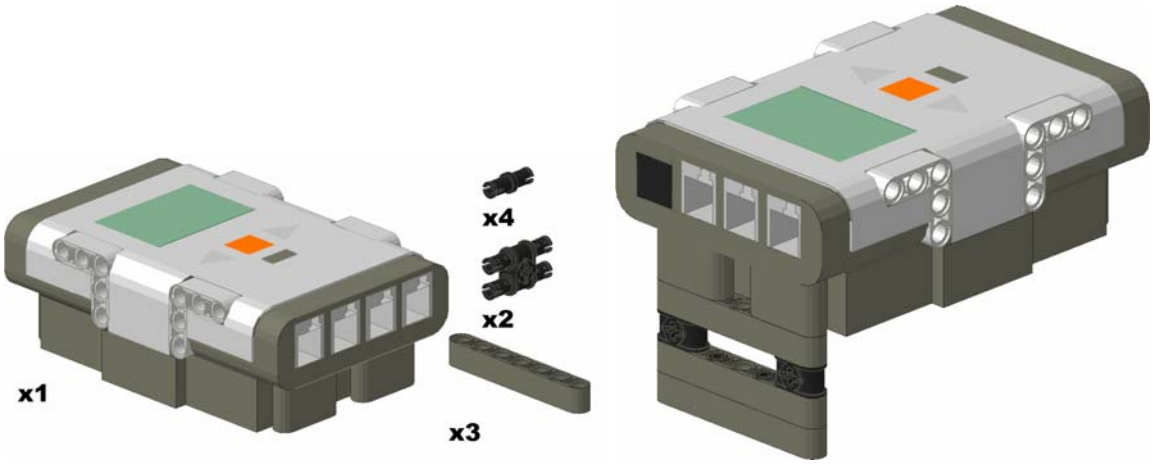

Attach one beam to the bottom of the NXT using two pins. Insert the double pin connectors into that beam. Then attach two more beams to those pieces using the other pins.

Step# 2

Insert a 4-axle through the wheel and slide a perpendicular connector piece onto each side of it. Make sure the open hole is the part slid on so that the axle rotates. Secure them with ½ bushes. Stick a 4-axle through the axle part of each of the connector pieces and slide another connector piece (using the open hole section) onto each of those, separated by a bushing. Secure the ends of these axles with ½ bushes. Finally slide one more 4-axle through the two connector pieces and through the shaped end of one more perpendicular connector piece, so that it sticks straight backwards.

Copyright 2007 LEGOengineering.com & Tufts Center for Engineering Educational Outreach

Step# 3

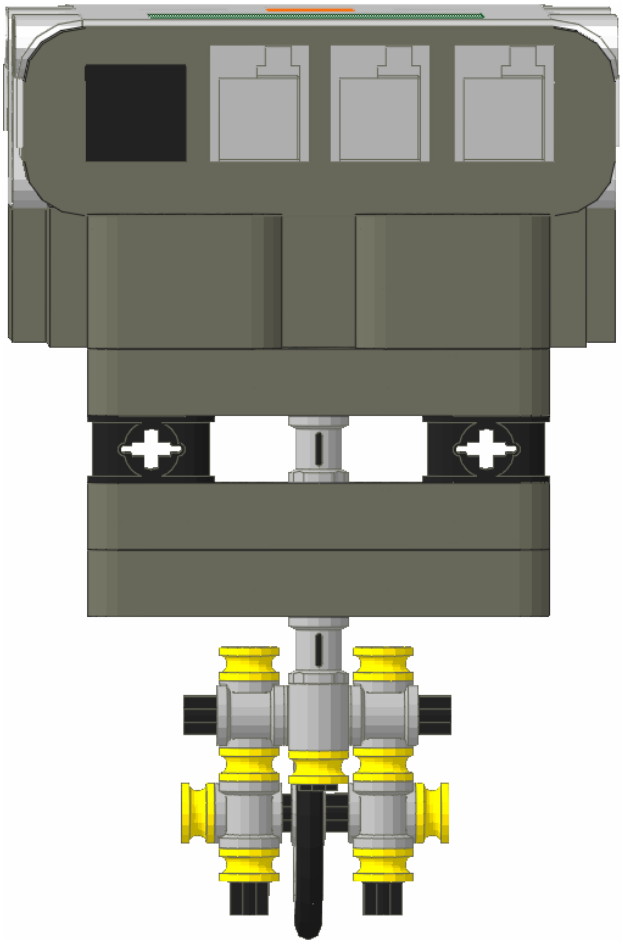

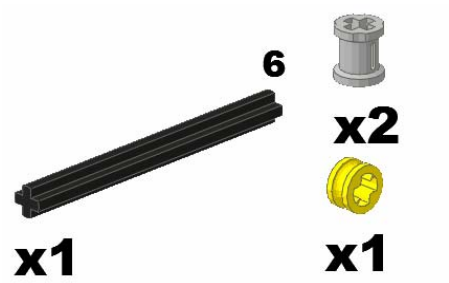

Insert a 6-axle up through the bottom two beams and secure it with a bush in the open space. Slide a bush up the bottom of the axle, followed by the wheel setup, and then another ½ bush.

Copyright 2007 LEGOengineering.com & Tufts Center for Engineering Educational Outreach

Long Front Setup

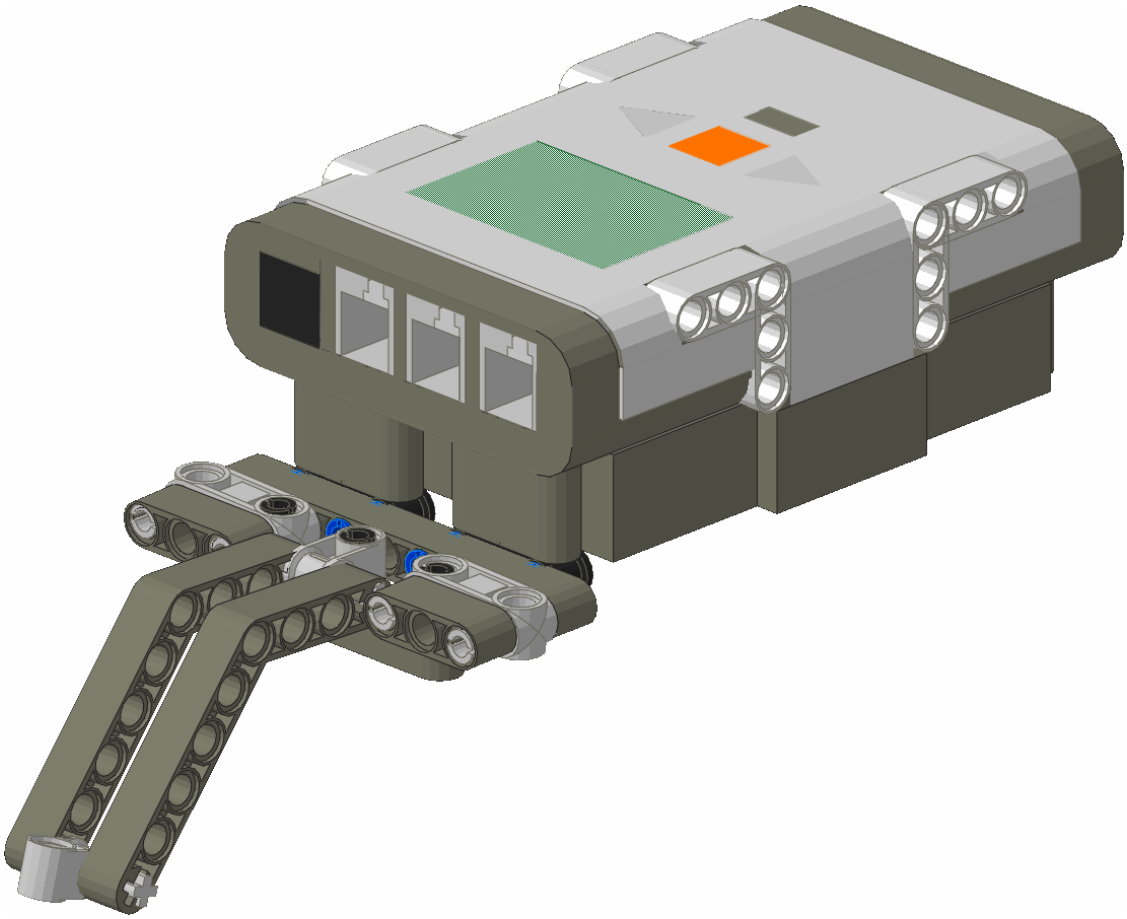

Model Description:

This is a front end setup that can slide or hold another wheel.

Copyright 2007 LEGOengineering.com & Tufts Center for Engineering Educational Outreach

These are the parts that you will need:

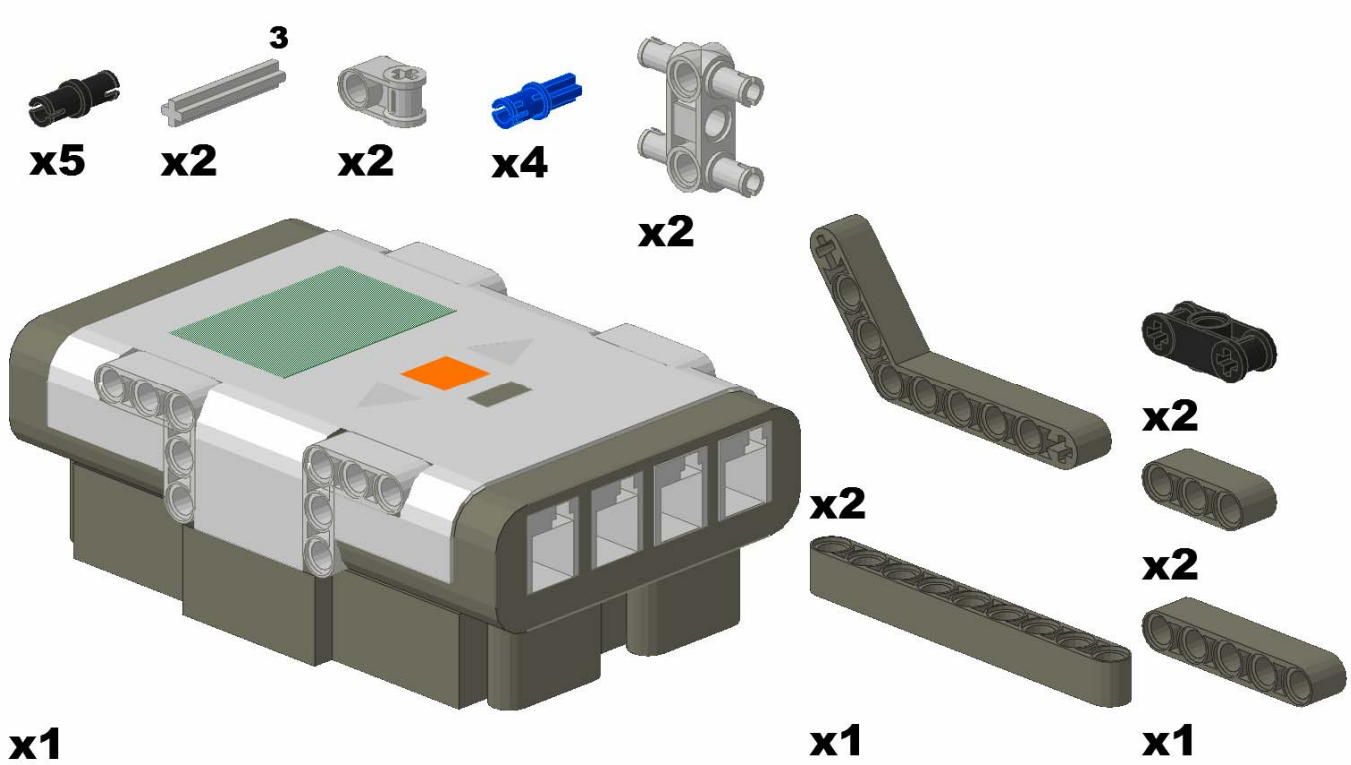

Copyright 2007 LEGOengineering.com & Tufts Center for Engineering Educational Outreach

Step# 1

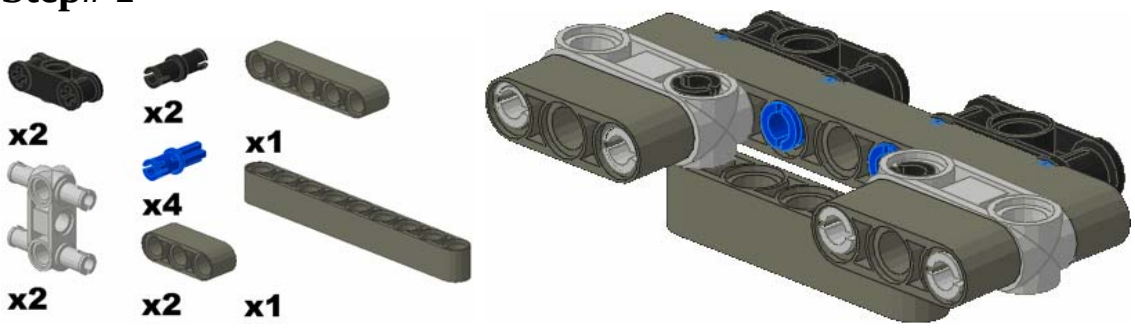

Connect the two black axle joiners to the 9-beam using the axle pins. Connect the two gray axle joiners to the 9-beam as well. Connect the 5-beam to the grey axle joiners using the connecting pins. Connect the 3-beams to the grey axle joiners.

Step# 2

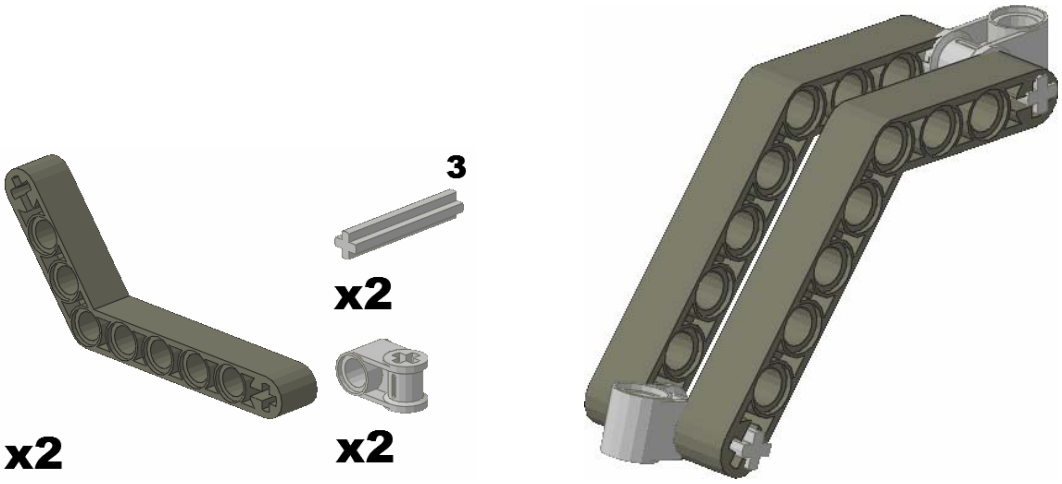

Connect the bent beams to the axle joiners using the 3-axles.

Copyright 2007 LEGOengineering.com & Tufts Center for Engineering Educational Outreach

Step# 3

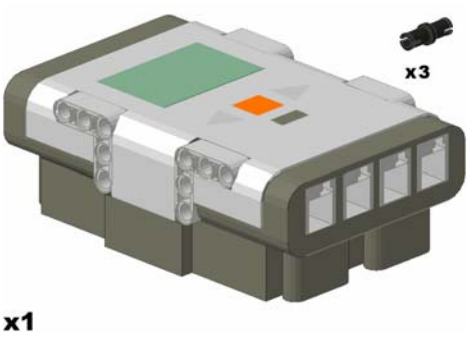

Connect the lift arms from step #2 to step #1, and then connect that to the NXT.

Copyright 2007 LEGOengineering.com & Tufts Center for Engineering Educational Outreach

Sliding Front Attachment

Model Description:

This is a front wheel attachment option with skids to slide around on. This gives an NXT car the ability to turn without the use of a wheel.

Copyright 2007 LEGOengineering.com & Tufts Center for Engineering Educational Outreach

These are the parts that you will need:

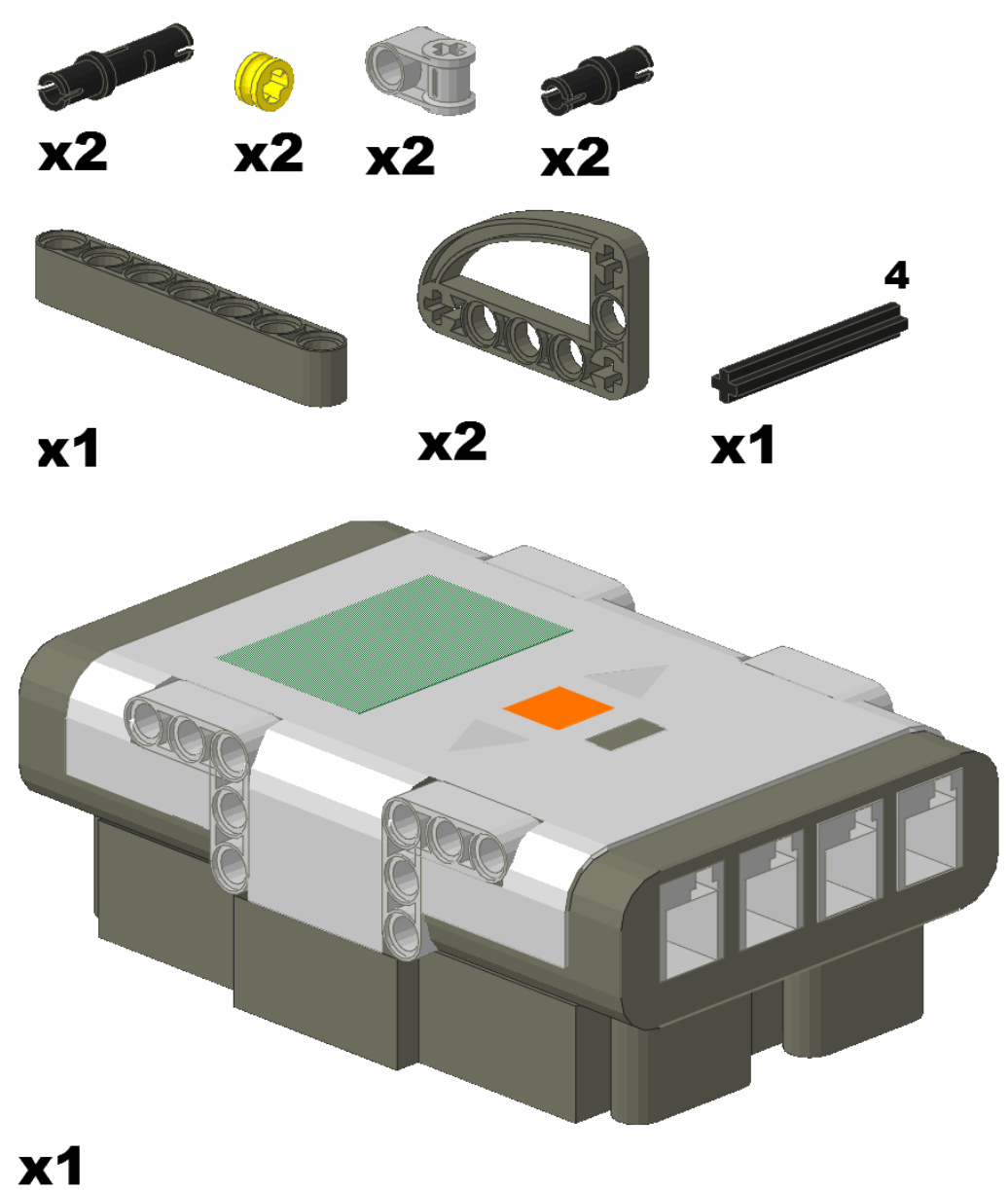

Copyright 2007 LEGOengineering.com & Tufts Center for Engineering Educational Outreach

Step# 1

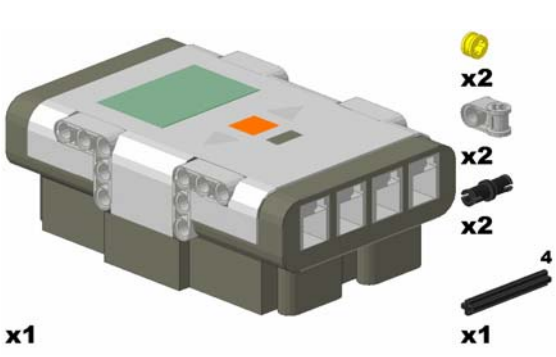

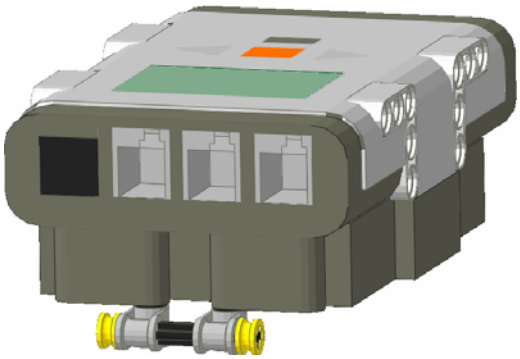

Attach the hole sections of the perpendicular connector pieces to the NXT using pins. Make sure the axle holes face horizontally. Insert a 4-axle into the perpendicular connector pieces and fasten it in place with two ½ bushes.

Step# 2

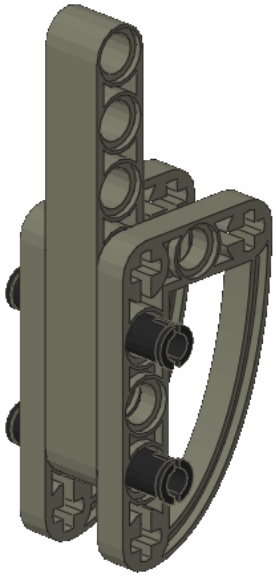

Fasten two curved beams to a 7-beam using extended pins. This is the sliding piece.

Copyright 2007 LEGOengineering.com & Tufts Center for Engineering Educational Outreach

Step# 3

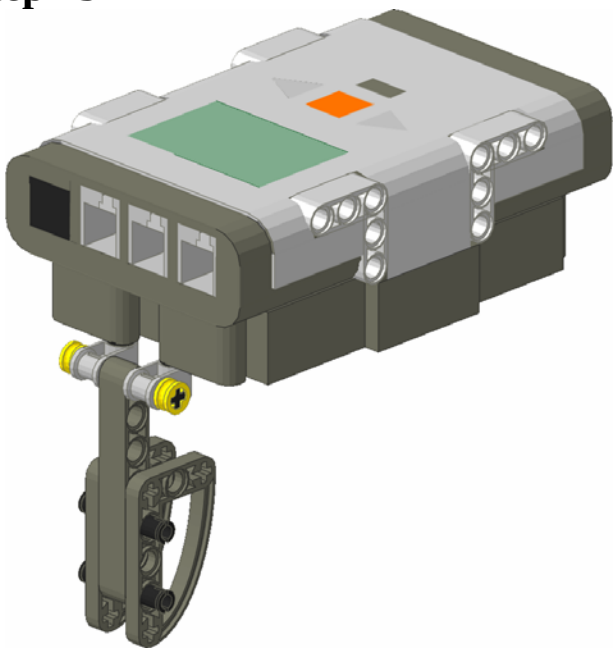

Take one of the ½ bushes off the axle and pull the axle out. Slide it back in, inserting it through the setup from step two. Replace the bush on the axle.

Copyright 2007 LEGOengineering.com & Tufts Center for Engineering Educational Outreach

Dual Wheel Setup

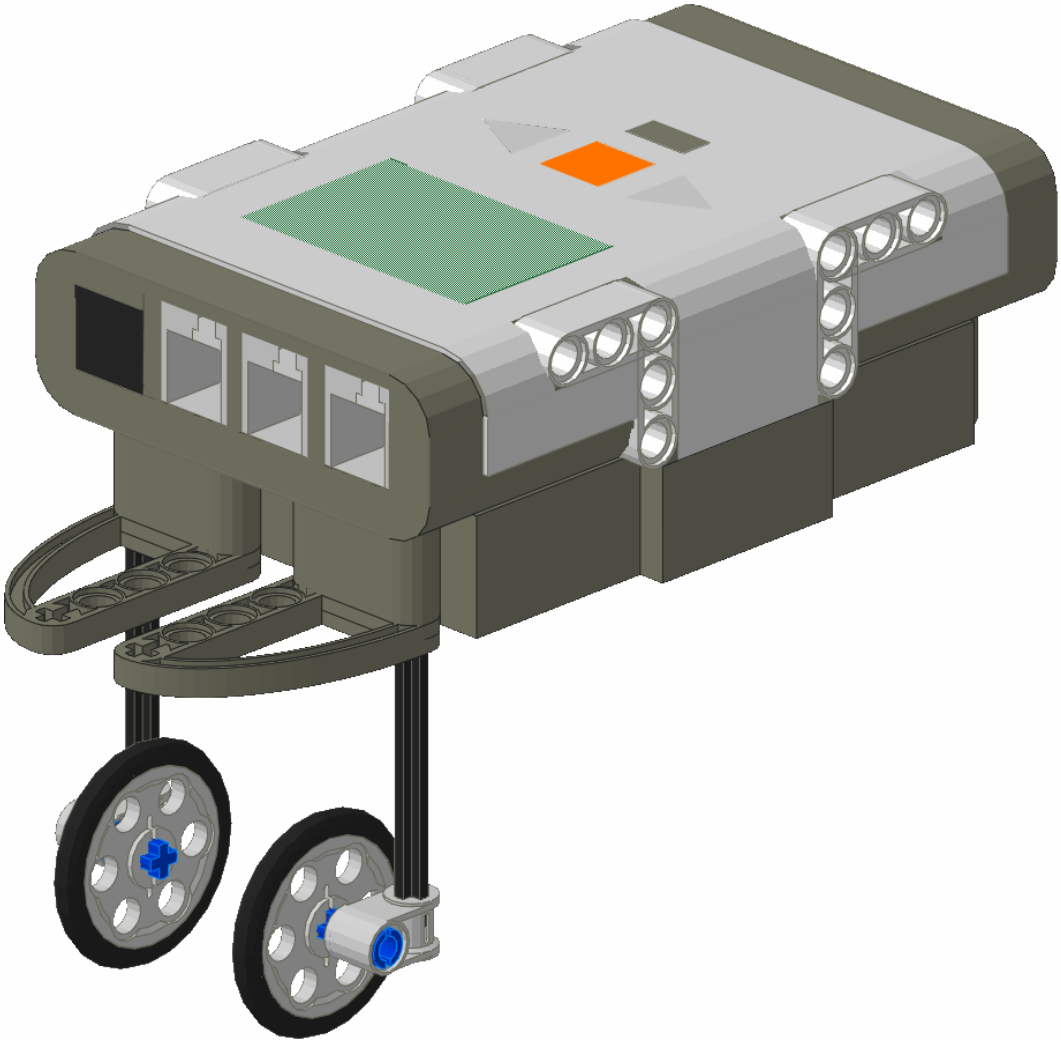

Model Description:

This is a front wheel attachment that has bars to hold various sensors.

Copyright 2007 LEGOengineering.com & Tufts Center for Engineering Educational Outreach

These are the parts that you will need:

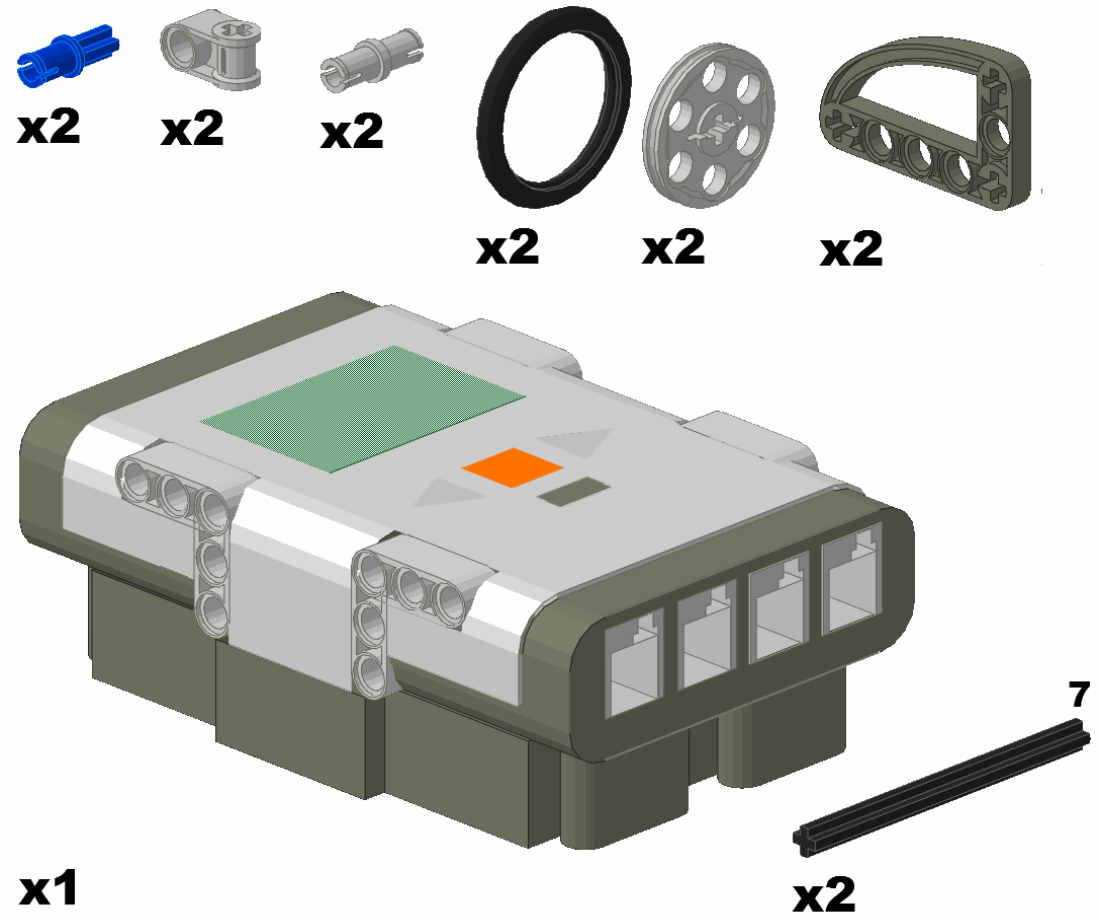

Copyright 2007 LEGOengineering.com & Tufts Center for Engineering Educational Outreach

Step# 1

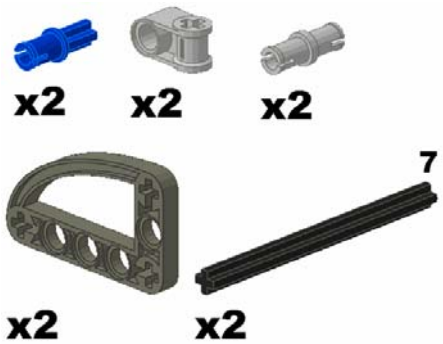

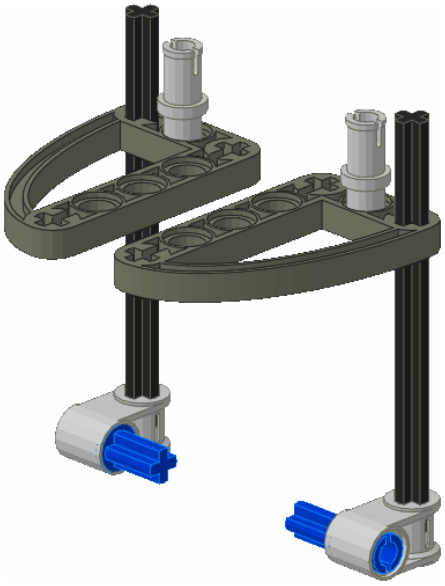

Attach the 7-axle to the bent lift arm. Attach the axle joiner to the bottom of the axle, and place an axle pin inside the axle joiner. Attach a friction pin to the lift arm. Repeat for the second lift arm.

Step# 2

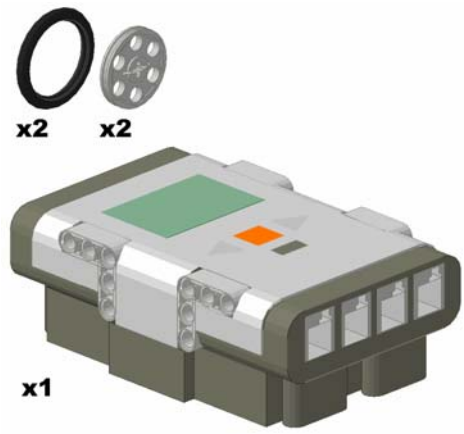

Attach each axle assembly to the NXT and add wheels to the axle pins.

Copyright 2007 LEGOengineering.com & Tufts Center for Engineering Educational Outreach

Swing Set

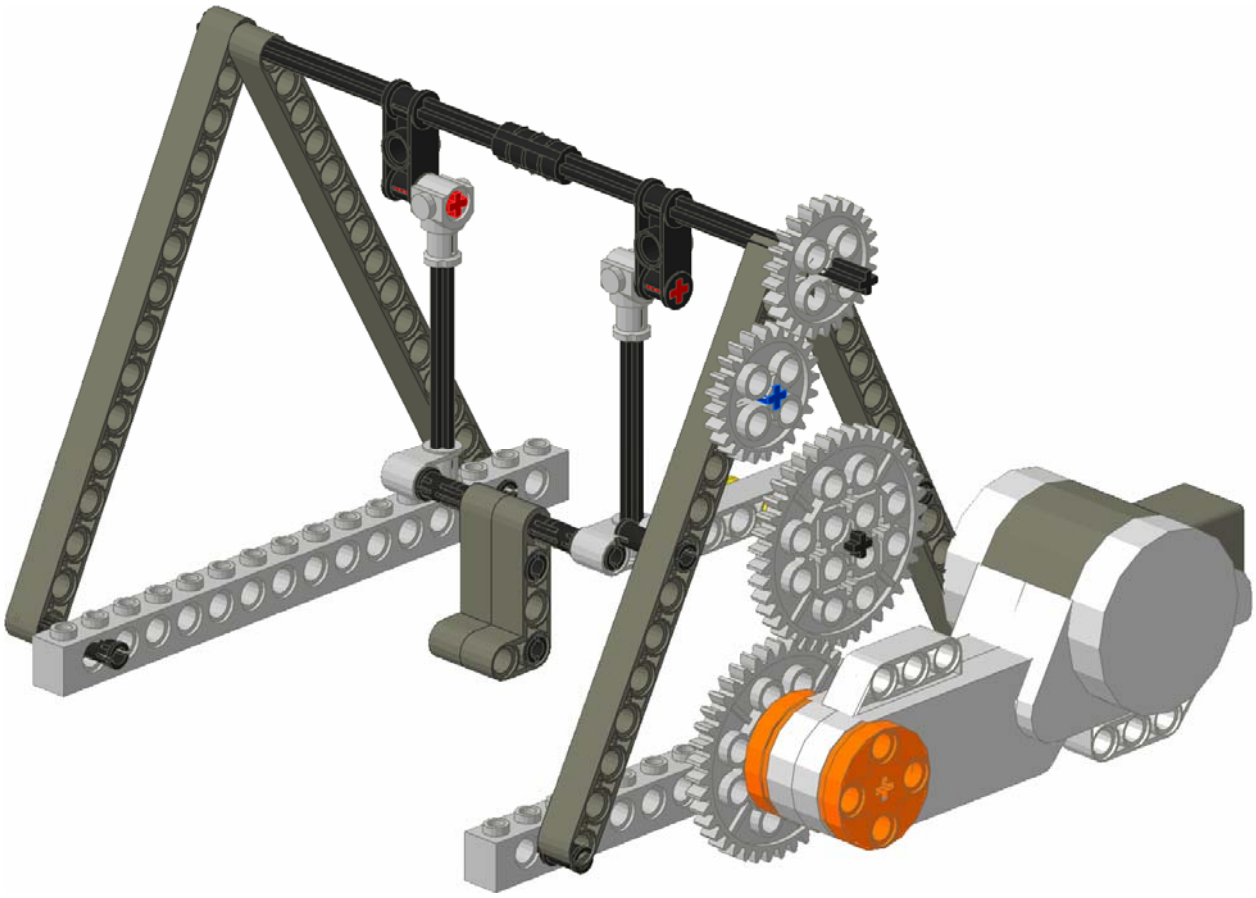

Model Description:

This is a swing set that can be programmed to move back and forth.

Copyright 2007 LEGOengineering.com & Tufts Center for Engineering Educational Outreach

These are the parts that you will need:

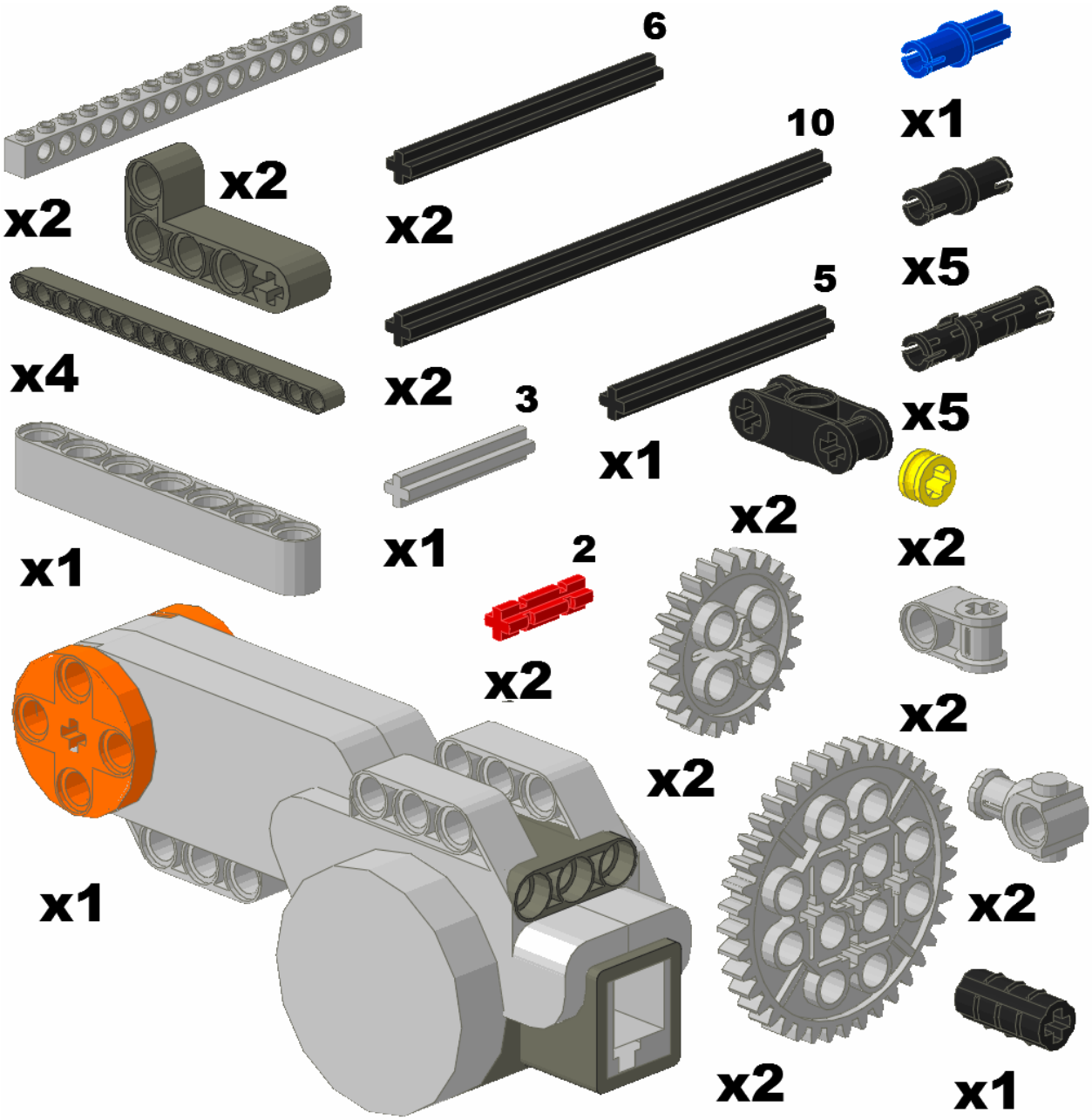

Copyright 2007 LEGOengineering.com & Tufts Center for Engineering Educational Outreach

Step# 1

Connect the two lift arms using two connector pins. Place a long pin with friction into the top holes of the lift arms. Connect these pins to the grey axle joiners. Insert a 6 stud axle into each axle joiner. Place a grey connector on each axle. Connect the black axle joiners using the 2 stud axles.

Step# 2

Slide the 10 stud axles through the black axle joiners from the previous step, and connect them using the axle connector. Create the base by connecting the beams to the second and fourteenth hole of the studded beams using a pin and a long pin. Slide the 10 stud axles through the ends of the beams. Connect the 7-beam to the right side of the assembly in the 8th hole from the bottom using a long and short pin. Place the 5 stud axle in the middle hole of the 7-beam, securing it on either side with the ½ bushings.

Copyright 2007 LEGOengineering.com & Tufts Center for Engineering Educational Outreach

Step# 3

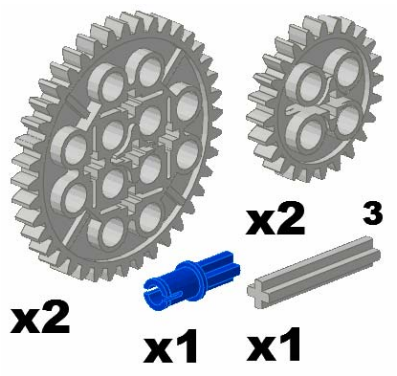

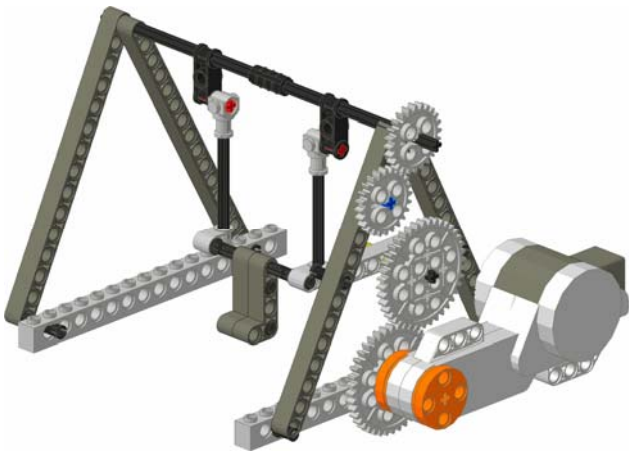

Place one of the 24 tooth gears on the exposed 10 stud axle at the top of the assembly. Connect the other 24 tooth gear using the axle pin to the 4th hole from the top of the beam. Connect one of the 40 tooth gears to the 5 stud axle in the middle of the assembly. Connect the other 40 gear using the 3 stud axle to the motor.

Copyright 2007 LEGOengineering.com & Tufts Center for Engineering Educational Outreach

NXT Merry-Go-Round!

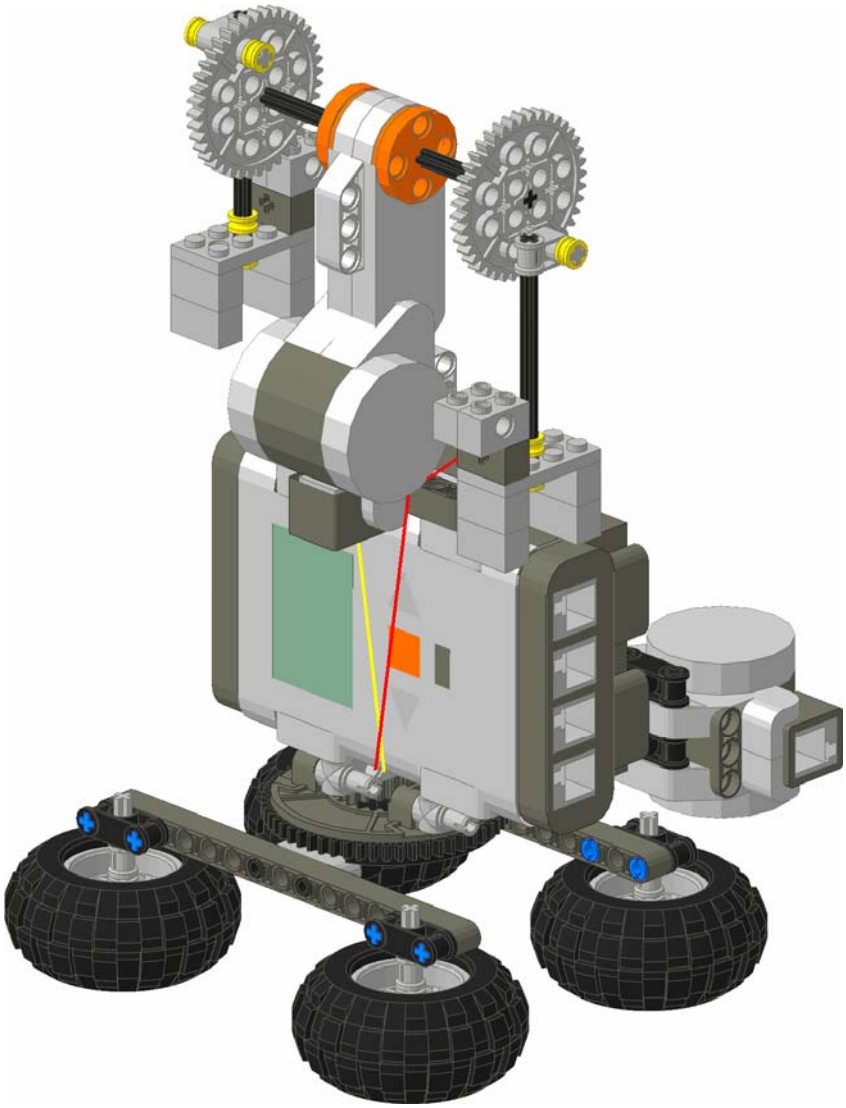

Model Description:

This medium building difficulty merry-go-round can rotate forever!! Wires will never get tangled up since the NXT spins with the motors. This model uses LEGO rubber bands to help hold one of the motors in place.

Copyright 2007 LEGOengineering.com & Tufts Center for Engineering Educational Outreach

These are the parts that you will need:

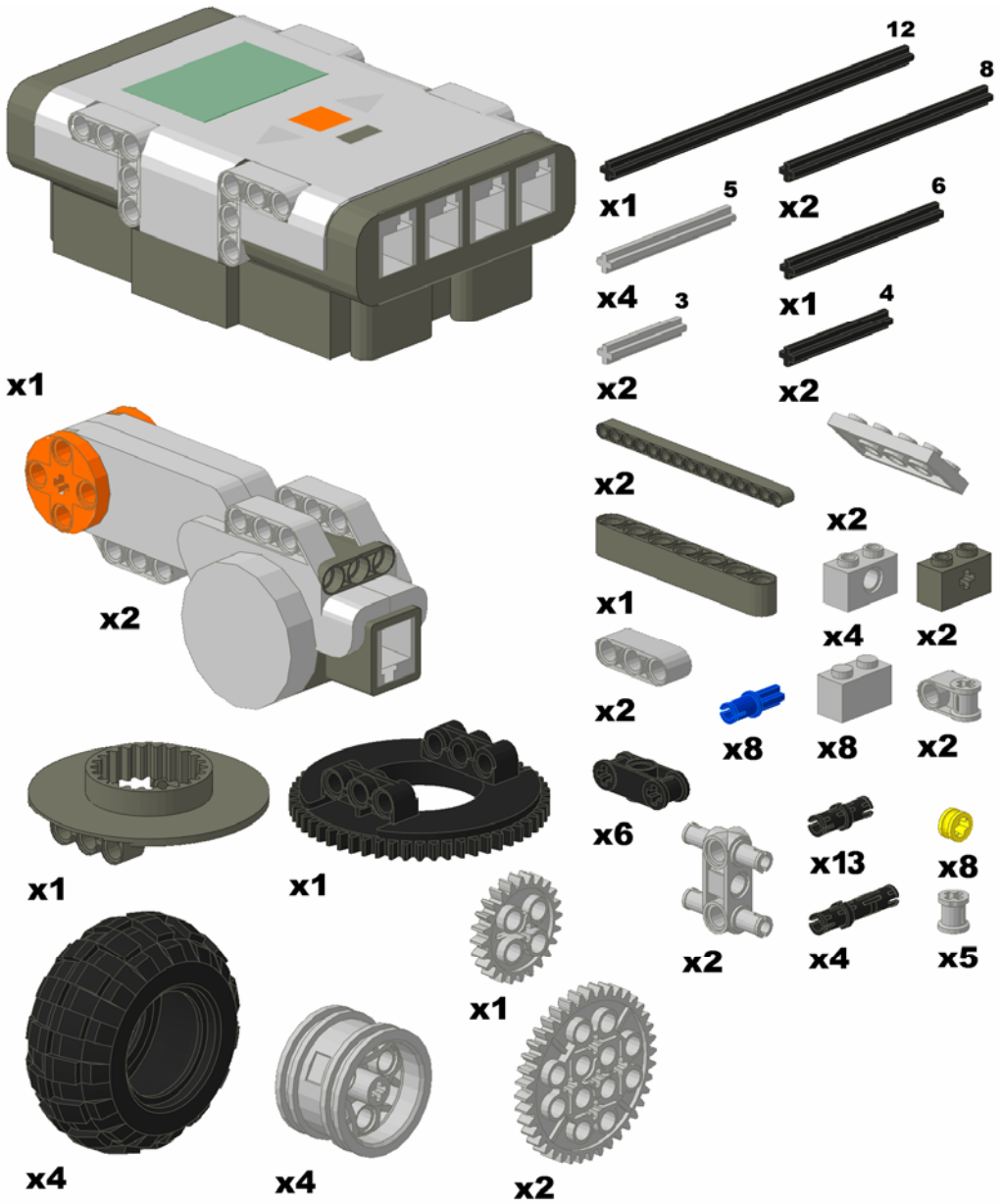

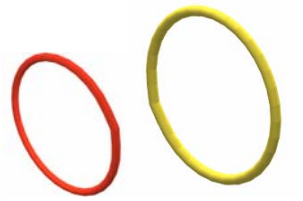

**You will need two LEGO rubber bands (belts).

Copyright 2007 LEGOengineering.com & Tufts Center for Engineering Educational Outreach

Step# 1 (do this step twice)

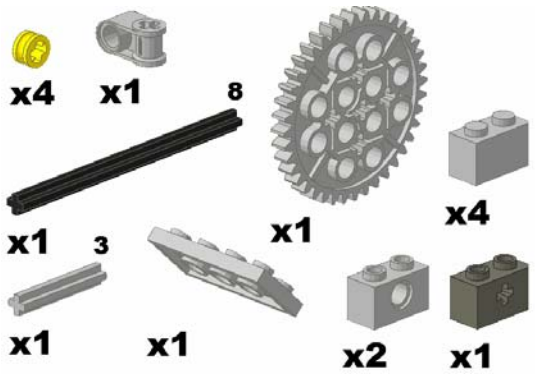

Repeat step #1. Do not repeat it in a mirror image, you want two exact copies. Set them aside until step #5.

Step# 2

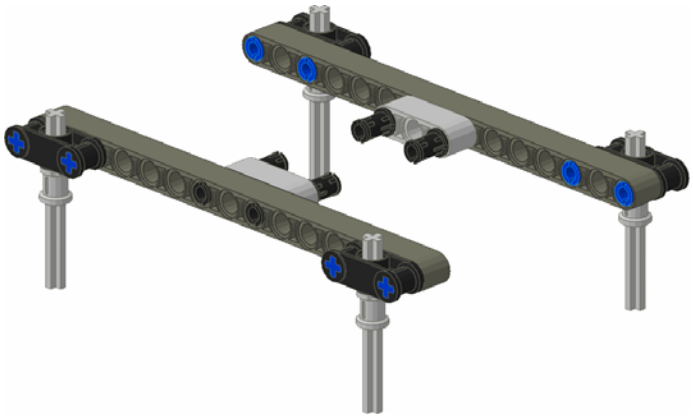

Once the wheels are attached, the Merry-Go-Round will have a base.

Copyright 2007 LEGOengineering.com & Tufts Center for Engineering Educational Outreach

Step# 3

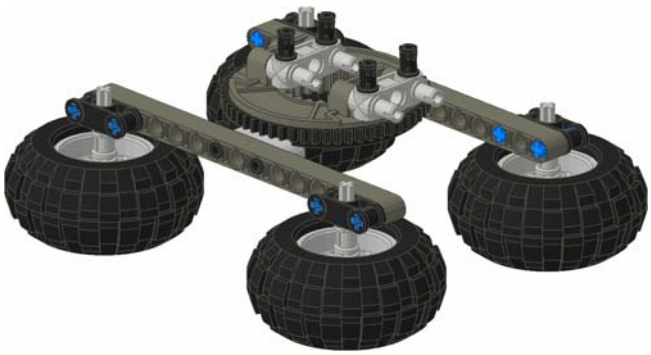

Use the parts from step #2. The base is now complete. The NXT will slide onto the 4 friction pins sticking out in the above figure. Set aside until step #7.

Step# 4

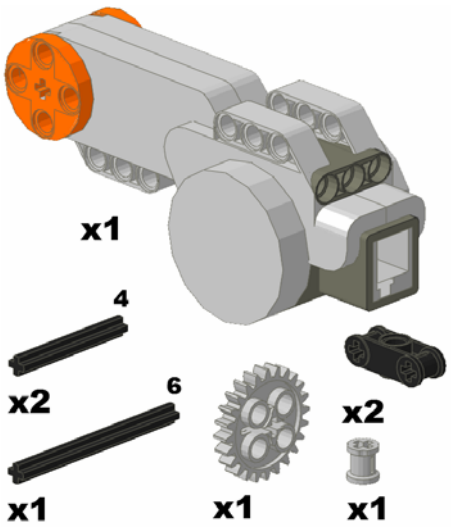

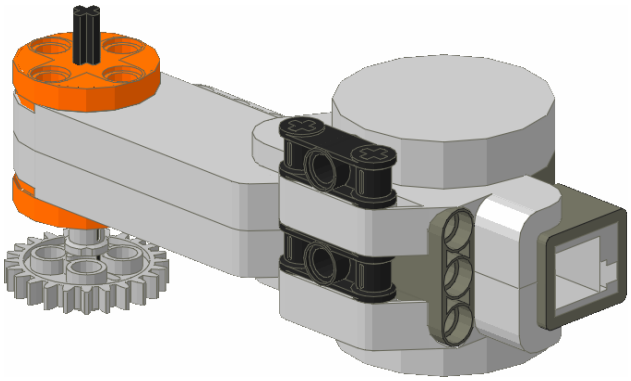

Slide the two 4-axles through the holes of the NXT motor and through the holes of the black 3 long perpendicular technic axle joiners. It is hard to see the 4-axles in the diagram above. Set aside until step #7.

Copyright 2007 LEGOengineering.com & Tufts Center for Engineering Educational Outreach

Step# 5

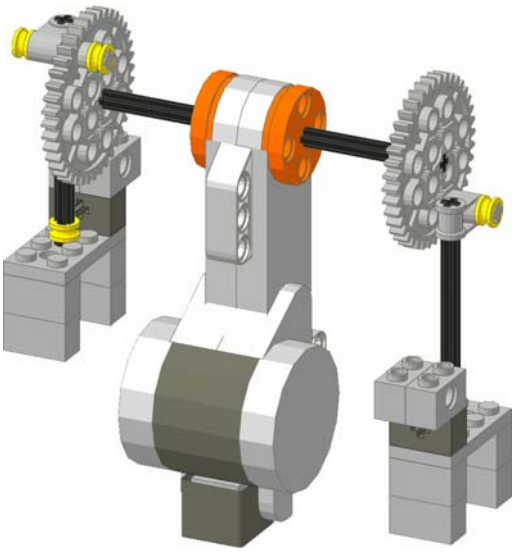

Attach the ponies from step #1 to the motor using a 12-axle. Set aside until step #7.

Step# 6

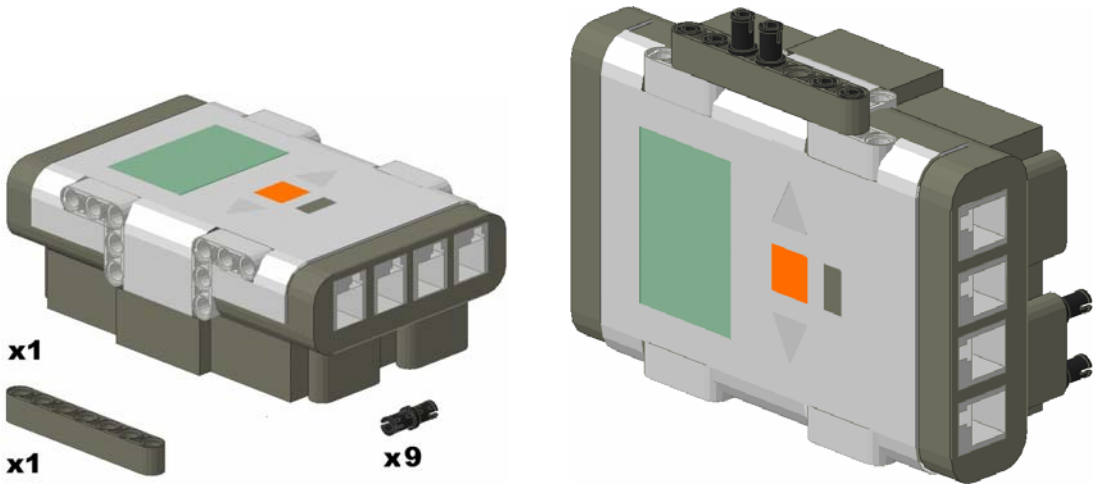

Copyright 2007 LEGOengineering.com & Tufts Center for Engineering Educational Outreach

Step #7

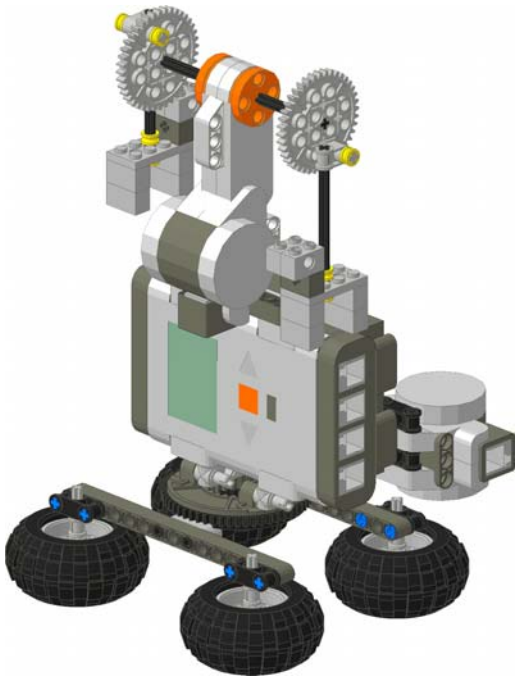

Attach the NXT to the base, and attach the motors to the NXT.

Step# 8

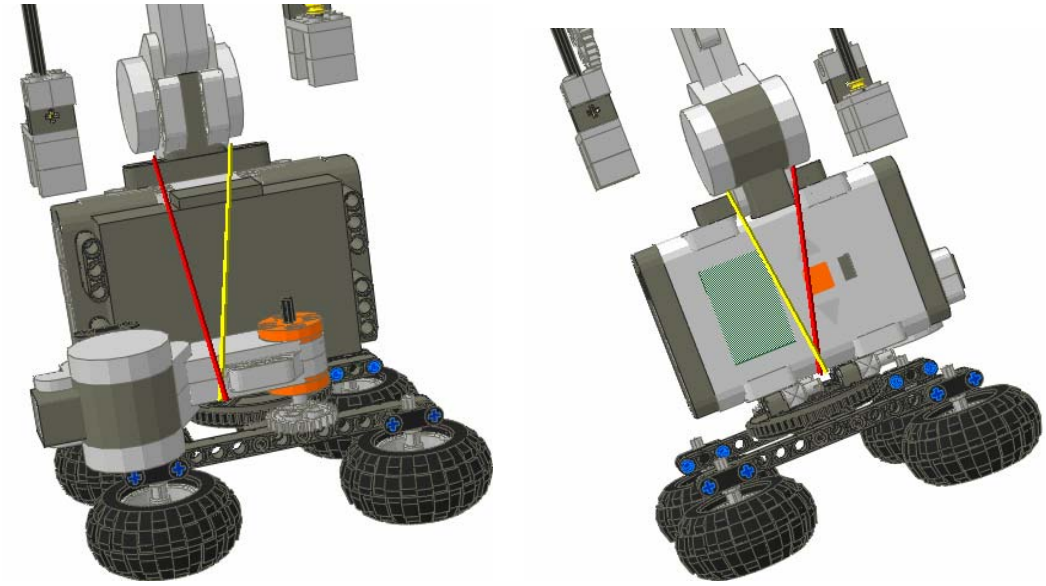

Use rubber bands (LEGO belts) to hold the motor in place.

Copyright 2007 LEGOengineering.com & Tufts Center for Engineering Educational Outreach

Step #9

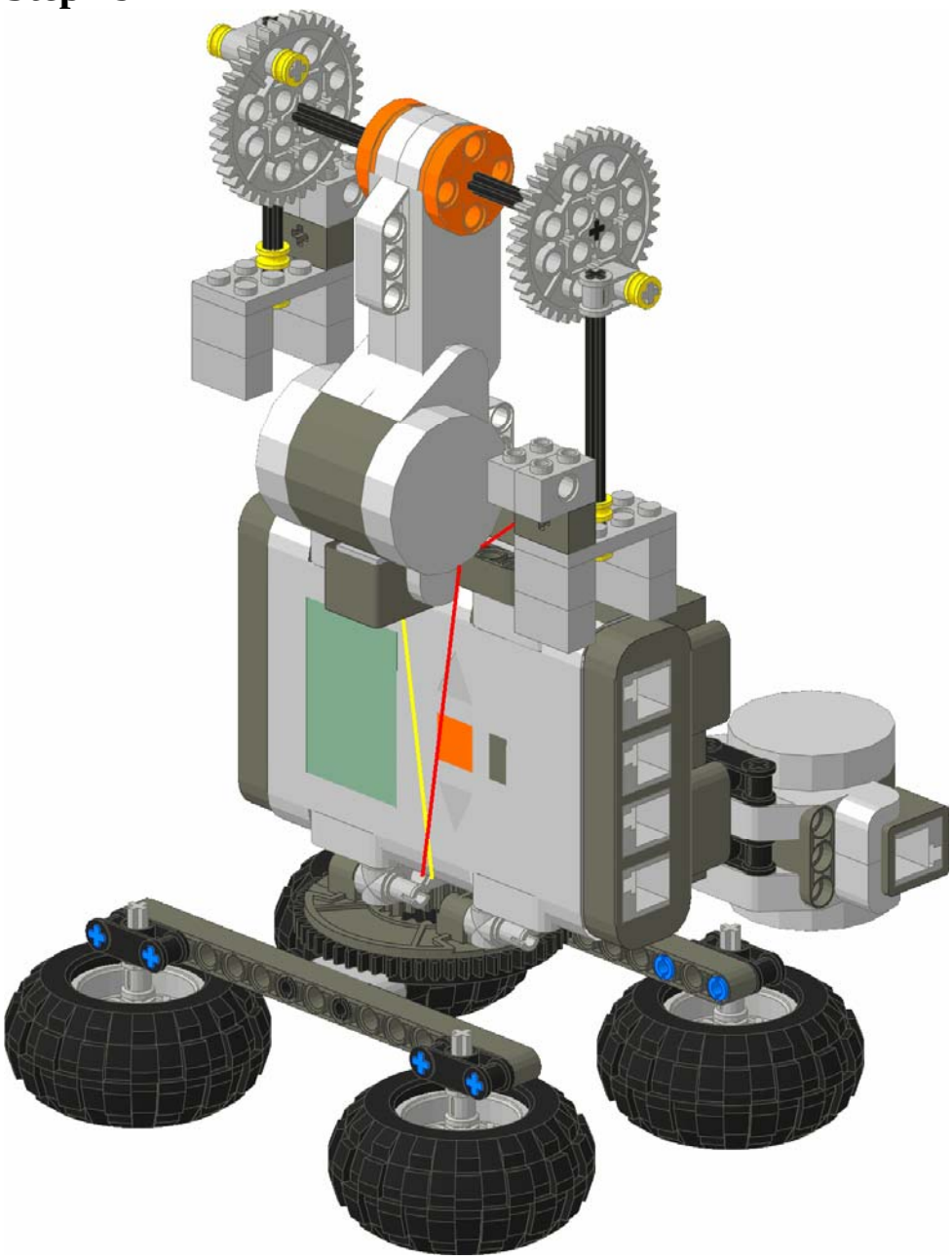

Your program must run both motors continuously. You will need to adjust the motor powers to obtain an appropriate speed. You may also need to adjust the placement of the rubber bands to ensure that the gears stay meshed. If you find the gears aren't staying together try rotating the motor the opposite direction so the force pushes it into the NXT instead of away.

Copyright 2007 LEGOengineering.com & Tufts Center for Engineering Educational Outreach

NXT Quick-Start Car

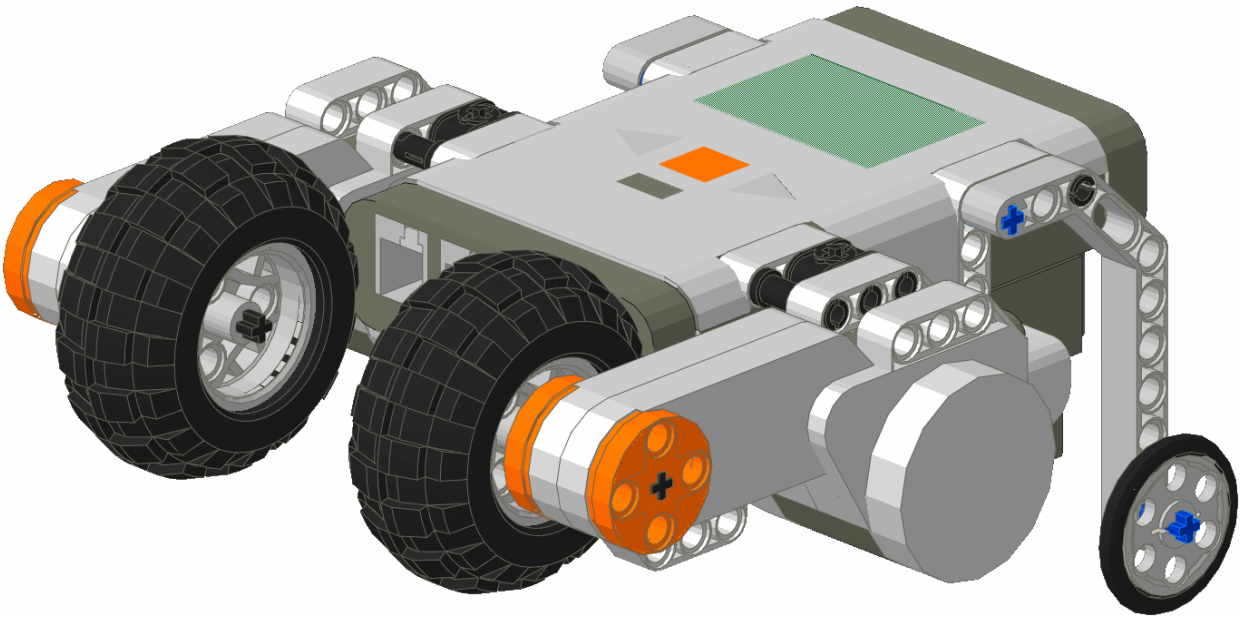

Model Description:

This is a simple, two-motor car that can be built in less than 15 minutes using the NXT kit. Additionally, all types of sensors can easily be added to this model.

Copyright 2007 LEGOengineering.com & Tufts Center for Engineering Educational Outreach

These are the parts that you will need:

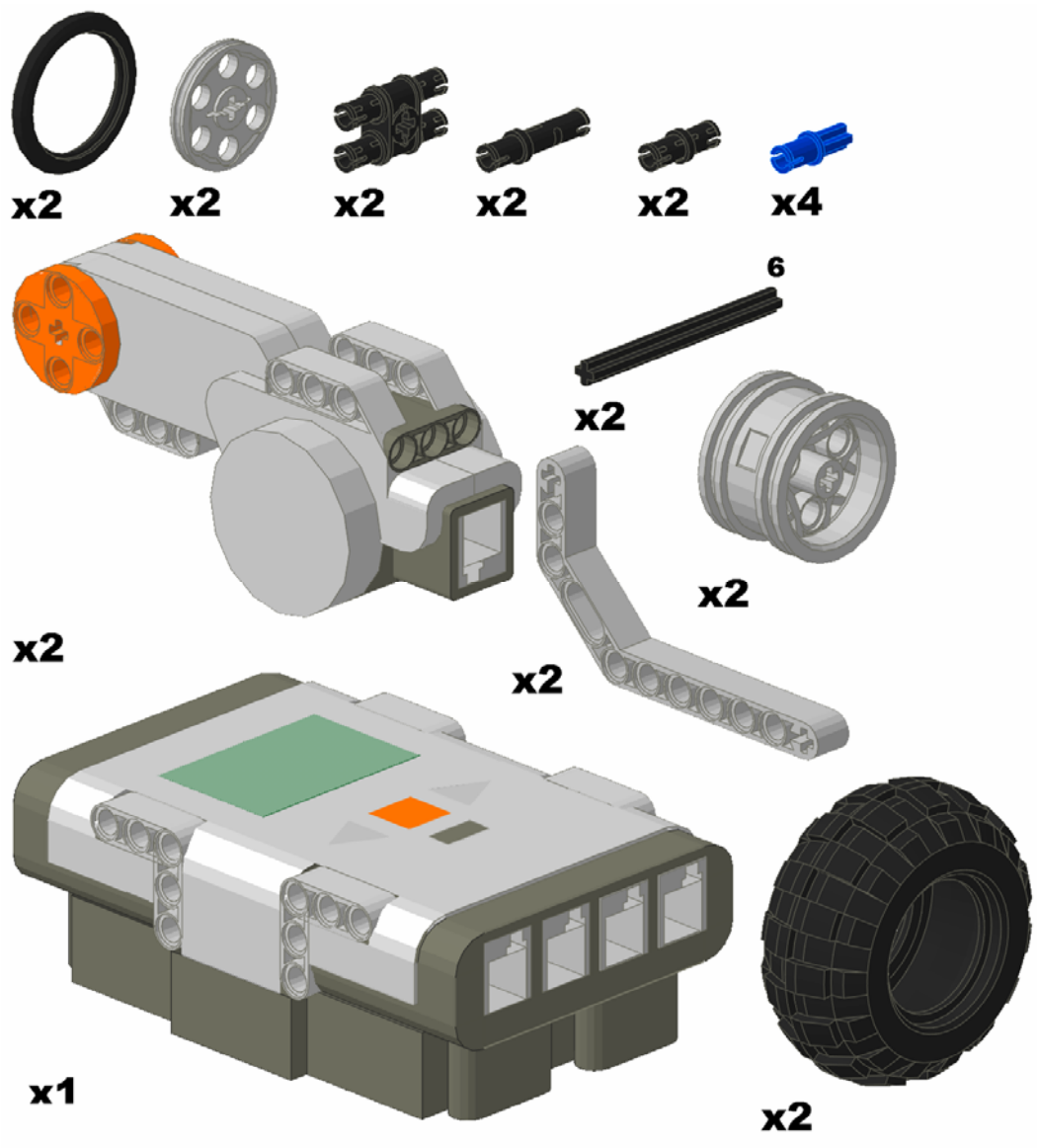

Copyright 2007 LEGOengineering.com & Tufts Center for Engineering Educational Outreach

Step# 1

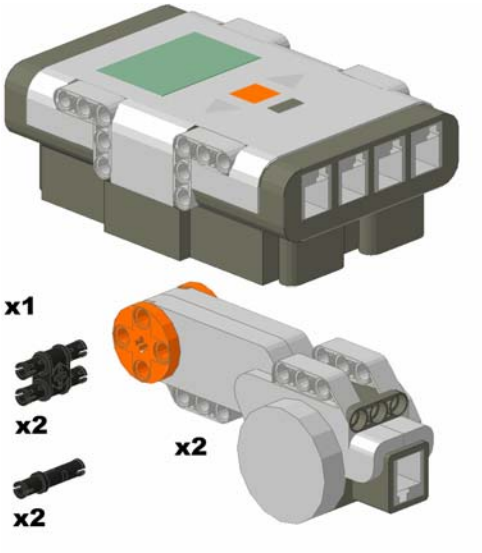

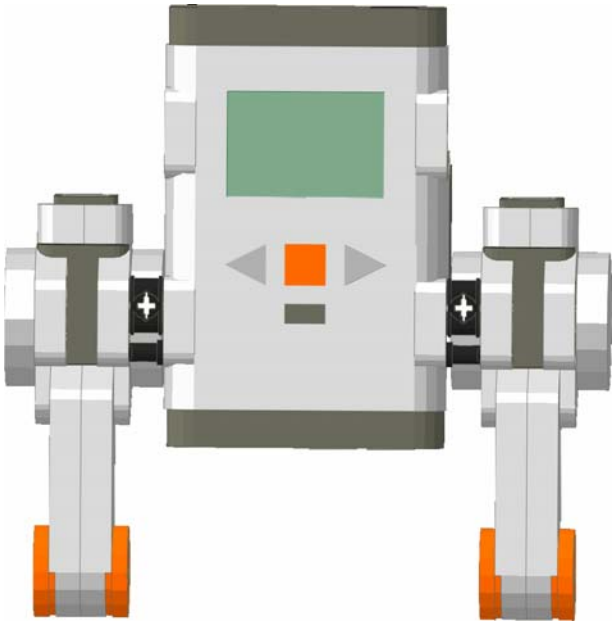

Attach 2 motors to the NXT using long friction pins and double friction pins.

Step# 2

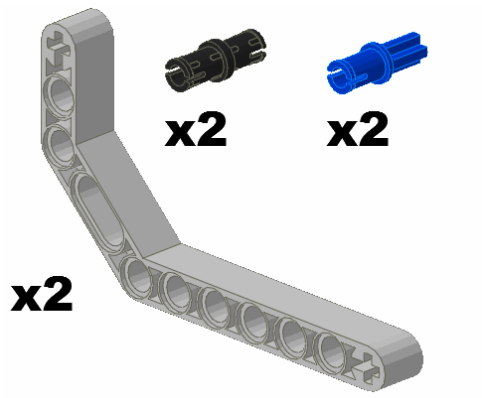

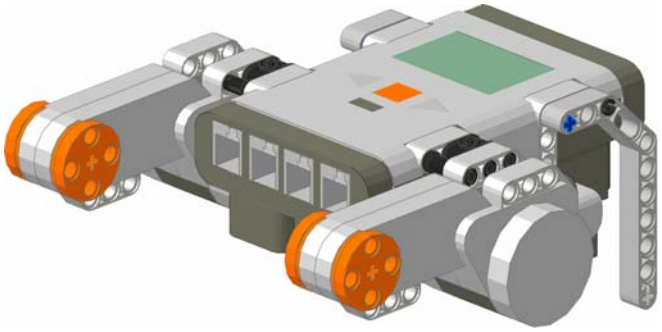

Attach 2 bent beams to the front of the car using the two pins. These beams will hold the front wheels.

Copyright 2007 LEGOengineering.com & Tufts Center for Engineering Educational Outreach

Step# 3

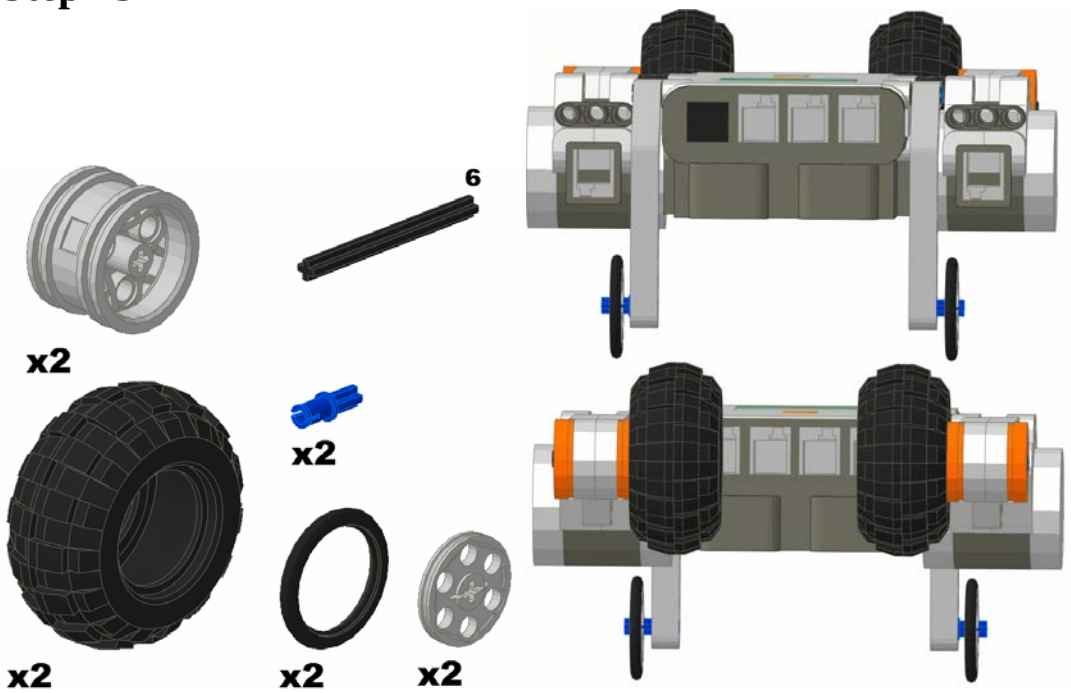

Attach 2 large NXT wheels to the motors using two 6-axels. Use the axel pins to secure the small wheels to the bent beams. Leave the front wheels bare to allow them to slide easily when the car is programmed to turn.

Step# 4 (Optional Sensor Additions)

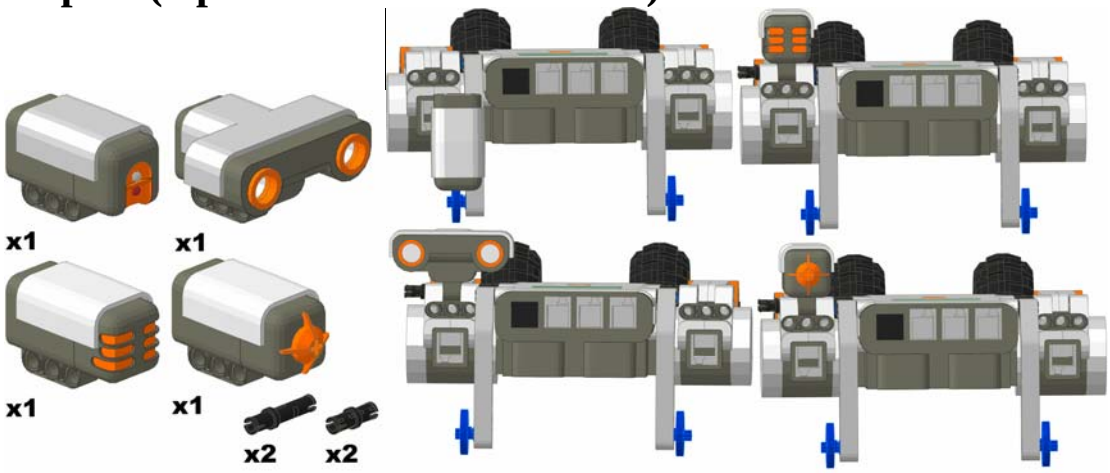

Attach the touch, proximity, or sounds sensor to the top of one of the motors using the long friction pin. Attach the light sensor to one of the bent beams using the normal friction pins. The light sensor should be facing the ground.

Copyright 2007 LEGOengineering.com & Tufts Center for Engineering Educational Outreach